NTT docomo

N-05D

INSTRUCTION MANUAL ’12.2

MEDIAS *ES*

docomo with series

MEDIAS

Introduction

Thank you for your purchase of "N-05D". For proper use of the N-05D, read this manual before and while you use the N-05D.

Before using the terminal

- The N-05D supports W-CDMA, GSM/GPRS, and wireless LAN connectivity.
- Because this terminal operates using radio frequencies, it cannot be used inside a tunnel, underground, in a building or other locations where radio waves do not reach the terminal, in locations with weak radio wave condition or outside of the FOMA's service area. The FOMA services may not be available on high upper floors of high-rise apartments or buildings, even if you can see no obstructions around you. On occasion, your calls may become disconnected even in areas with strong signal, even if you are not moving, or even if all four antenna icons are displayed.
- Note that because the terminal operates on radio frequencies, your calls are at risk of being intercepted by the third party. However, the W-CDMA, GSM/GPRS system automatically scrambles all calls through a private call feature. Therefore, even if the third party successfully intercepts your call, they will only hear noise.
- The terminal operates on radio frequencies by converting voice into digital signals. If the caller moves into an area of adverse radio wave condition, the digital signal may not be restored accurately, and the voice received in the call may differ slightly from the actual voice.
- The terminal has FOMA Plus-Area and FOMA HIGH-SPEED Area support.
- Please keep a separate record of the information (e.g., Phonebook) you have saved in the terminal. Even if the data may be lost as a result of malfunction, repair, changing, or other handling of the terminal, under no condition will DOCOMO be held liable for any lost data saved in the terminal.
- It is recommended that you save your important data into microSD cards.
- The terminal is the same as a PC. Depending on the applications or other items that you install, the operation of the terminal may become unstable and your location or personal information saved on the terminal may be disseminated on the Internet and used improperly. You should therefore thoroughly check the provider and operation status of an application before using it.

SIM Unlocking

The terminal supports SIM unlocking. Unlocking the SIM enables use of other-brand SIM cards.

- SIM unlocking can be requested at any DOCOMO shop.
- Separate charges apply for SIM unlocking.
- Services, functions, etc. are limited when using other-brand SIM cards. DOCOMO does not guarantee operation under such conditions.
- For details on SIM unlocking, refer to the NTT DOCOMO website.

Supplied Accessories

N-05D (with warranty and back cover N59)

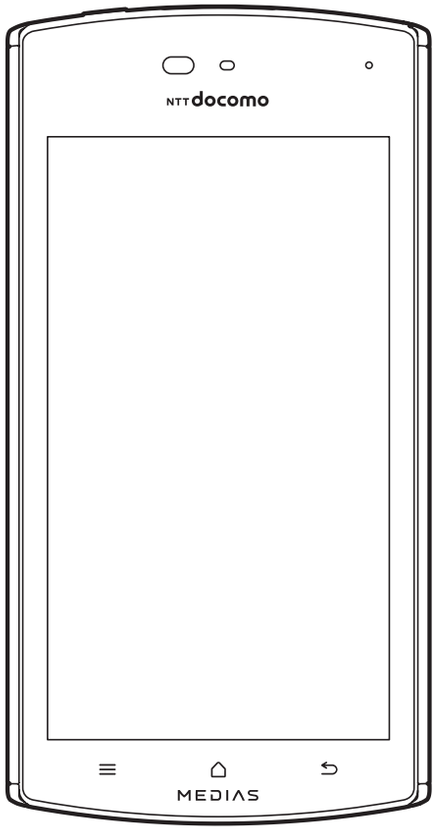

N-05D Quick Start Guide (Japanese)

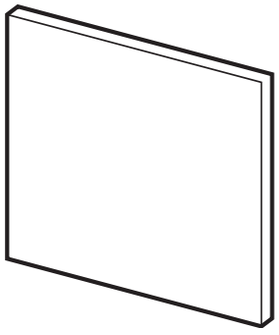

microUSB cable for PC connection (sample)

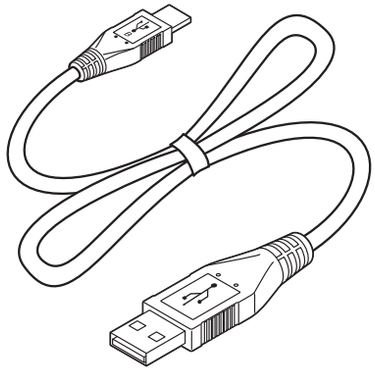

Battery Pack N32

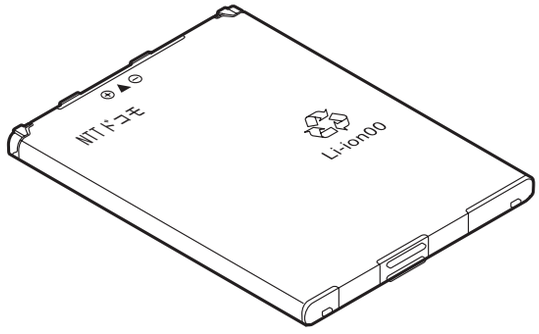

Desktop Holder N38

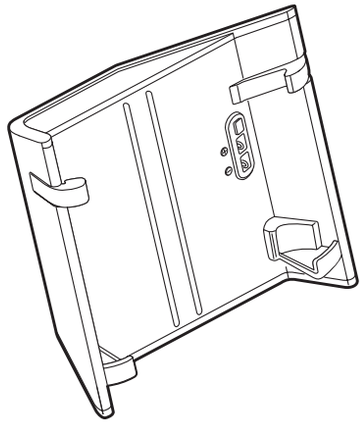

FOMA microUSB Adapter N01 for charging

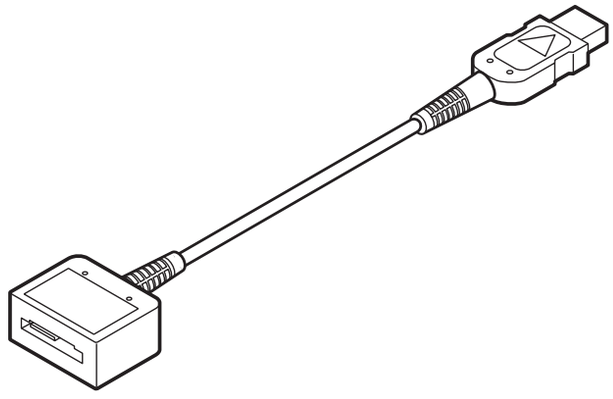

microSD card (2 GB) (sample)

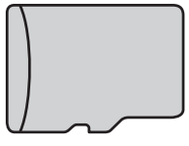

* This has been attached to the terminal when purchased.

● "Introduction to Options and Related Devices" → P.167

About This Manual

Notes When Reading

- In this manual, operations are simplified as follows.

Description	Operation
On the Home screen, ☰ ▶ "Settings" ▶ "Call settings"	Tap ☰ on the Home screen, tap "Settings", and then tap "Call settings"

- Please note that "N-05D" is called the "the terminal" in this manual.
- Display examples used in this manual are images for explanation only and may be different from the actual display.
- This manual assumes the settings configured when you purchased the terminal, so the views and operation on the terminal may differ if you have changed the settings.
- The screens shown as examples in this manual are displayed when "English" is set for ☰ ▶ "本体設定" (Settings) ▶ "言語とキーボード "(Language & keyboard) ▶ "言語を選択" (Select language). Set "English" for "言語を選択"(Select language) in advance.
- The reproduction or reprinting of all or part of this manual without prior permission is prohibited.
- The contents of this manual are subject to change without prior notice.

Viewing the operations manual in the terminal

Tap "Instruction Manual" and launch the instruction manual application to see operation methods in the terminal.
Some functions can be activated from the screen explaining about it.

The latest information on this manual can be downloaded at the NTT DOCOMO website.

- User's Manual (PDF file) Download
  http://www.nttdocomo.co.jp/support/trouble/manual/download/index.html

* The URL and manual contents are subject to change without prior notice.

Contents

Supplied Accessories ····· 1
About This Manual ····· 3
Notes on using N-05D ····· 6
Precautions (Always follow these directions) ····· 7
Handling Precautions ····· 27
Waterproof/Dustproof Function ····· 35

Getting Started P. 42
- Part Names and Functions ····· 42
- miniUIM ····· 44
- microSD Card ····· 45
- Battery Pack ····· 47
- Charging ····· 49
- Turning Power ON and OFF ··· 54
- Switching the Screen Display Orientation ····· 54
- Basic Operations ····· 55
- Initial Settings ····· 57
- Reading the Status Bar ····· 62
- Text Entry ····· 66

docomo Palette UI P. 72
- Home Screen ····· 72
- Managing the Home screen ·· 72
- Application List Screen ····· 75
- Using the Search Function ····· 82
- Task Manager ····· 83
- Checking the Home application ····· 83

Calling/ Network Services P. 84
- Making/Receiving Calls ····· 84
- Call Log ····· 87
- Phonebook ····· 88
- Available Network Services ···· 90

Settings P. 99
- Wireless & Networks ····· 99
- Call Settings ····· 107
- docomo service ····· 107
- Sound ····· 108
- Display ····· 108
- eco mode ····· 109
- Location & Security ····· 110
- Applications ····· 113
- Accounts & Sync ····· 113
- Privacy ····· 114
- Storage ····· 115
- Search ····· 115
- Language & Keyboard ····· 116
- Voice Input & Output ····· 116
- Accessibility ····· 116
- Date & Time ····· 117
- About Phone ····· 117

Email/ Browser P. 118	sp-mode Mail ····· 118 SMS ····· 118 Email ····· 120 Gmail™ ····· 121 Early Warning "Area Mail" ·· 124 Google Talk™ ····· 125 Browser ····· 126
File Management P. 130	Infrared Data Exchange ····· 130 Bluetooth Communication ·· 131 Connecting to a PC ····· 132 Using PC Link ····· 133 Using DLNA-compatible devices ·····134
Applications P. 138	Camera ····· 138 Gallery ····· 141 Media Player ····· 142 Android Market™ ····· 144 GPS ····· 146 1Seg ····· 149 Osaifu-Keitai ····· 153 ToruCa ····· 155 Clock ····· 156 Calendar ····· 157 Schedule ····· 158 Memo ····· 159 Calculator ····· 159 Quickoffice ····· 159 iD設定アプリ (iD appli) ····· 160
Using Overseas P. 161	Overview of International Roaming (WORLD WING) ···· 161 Services Available Overseas · 161 Check Before Using the Terminal Overseas ····· 162 Network Settings for Use Overseas ····· 164 Making/Receiving Calls while at Destination ····· 164 Configuring settings for international roaming ····· 166
Appendix/ Index P. 167	Introduction to Options and Related Devices ·····167 Sample (microUSB cable for PC connection)·····167 Troubleshooting (FAQs) ····· 168 Smartphone Remote Support ····· 175 Warranty and After-Sales Service ····· 176 Updating Software ····· 179 Major Update ····· 183 Main Specifications ····· 185 Specific Absorption Rate (SAR), etc. of Mobile Phones ····· 188 Export Administration Regulations ····· 192 Intellectual Property Right ··· 192 Index ····· 198

Notes on using N-05D

- Only a miniUIM can be used on the terminal. Exchange your UIM or FOMA card at a docomo Shop Service Counter.
- The terminal does not support accessing i-mode sites (programs), i-αppli, etc.
- Android™ applications and service content may change in the future without prior notice.
- The terminal automatically performs communication for synchronizing data, checking the latest software version, maintaining connection with the server, etc. Also, operations such as downloading applications and viewing videos cause a large volume of packet to be transmitted and incurs high communication charges. Subscription to packet flat-rate service is highly recommended.
- Public mode (Drive mode) is not supported.
- Setting the phone to Silent mode does not mute sounds (playback of video or music, 1Seg, alarm, etc.) other than the ringtone and notification sounds.
- You can check your phone number with the following procedure:
  From the Home screen, [≡] ▶ "Settings" ▶ "About phone" ▶ "Status"
- You can update the software of the terminal. → P.179
- Updates for quality improvement of the terminals and operating system (OS) upgrades may be applied. Such an update or upgrade may cause applications you are using to be unusable or have unexpected errors.
- When the memory capacity of a microSD card or the terminal become nearly full, running applications may not function correctly. If this happens, delete some of your saved data.
- Set the screen lock password to ensure the security of the terminal for its loss. → P.110
- Refer to the Google Inc. terms of usage regarding services that Google™ provides. Also refer to the respective terms of usage for other web services.
- If the terminal is lost, change your password of each account using a PC to prevent other persons from using Google services such as Google Talk, Gmail, Android Market, as well as Twitter and mixi.
- The terminal does not support service providers other than sp-mode, mopera U or Business mopera Internet.
- A subscription to sp-mode is required to use tethering.
- By default, security is not configured for Wi-Fi tethering. Configure security if required.

- Packet communication charges for using tethering differ depending on your fee plan. A flat-rate packet rate is strongly recommended.
- For details on charges during use, refer to: http://www.nttdocomo.co.jp/english/

Precautions (Always follow these directions)

■To ensure that you use the terminal correctly, read "Precautions" carefully before use. Keep this manual after reading for future reference.

■The precautions must be observed at all times since they contain information intended to prevent the bodily injury or damage to property.

■The following symbols indicate the different degrees of injury and damage that may occur if the information provided is not observed and the terminal is used incorrectly:

⚠DANGER	**Indicates that death or serious bodily injury may result directly and immediately from improper use.**
⚠WARNING	**Indicates that death or serious bodily injury may result from improper use.**
⚠CAUTION	**Indicates that minor injury or property damage may result from improper use.**

■The following symbols indicate specific directions:

Don't	**Indicates that it is prohibited.**
No disassembly	**Indicates that it must not be disassembled.**
No wet hands	**Indicates that you must not touch it with wet hands.**
No liquids	**Indicates that it must not be used near water, which means that you must not let it become wet.**
Do	**Indicates that it is an instructionbased compulsory conduct (must be acted).**
Unplug	**Indicates that you must unplug the power cord from the outlet.**

■Safety precautions are explained in the following categories:

1. Precautions for the Terminal, Battery Pack, Adapter (including adapter for charging), Desktop Holder and miniUIM (common) P.9
2. Precautions for the Terminal P.11
3. Precautions for the Battery Pack P.14
4. Precautions for the Adapter (including adapter for charging) and Desktop Holder P.16
5. Precautions for the miniUIM P.18
6. Precautions for Use Near Electronic Medical Devices P.18
7. Precautions for the microUSB Cable for PC Connection (sample) P.22
8. Precautions for the microSD Card (sample) P.25

1. Precautions for the Terminal, Battery Pack, Adapter (including adapter for charging), Desktop Holder and miniUIM (common)

⚠DANGER

Don't

Do not use, keep or leave the devices in locations subject to high temperatures, such as near fire, a heating appliance, in a kotatsu, in direct sunlight or inside a car on a hot day.
Doing so may cause fire, burns, or injury.

Don't

Do not put the devices in a microwave oven or pressurized container.
Doing so may cause fire, burns, injury or electric shock.

No disassembly

Do not disassemble or modify the equipment.
Doing so may cause fire, burns, injury or electric shock.

No liquids

Do not allow the devices to become wet with liquids, such as water, drinking water or pet urine.
Doing so may cause fire, burns, injury or electric shock.
For waterproof function, refer to the following:
→ P.35 "Waterproof/Dustproof Function"

Do

Use the battery pack and adapter (including adapter for charging) specified by NTT DOCOMO for the terminal.
Failure to observe this precaution may cause fire, burns, injury or electric shock.

⚠WARNING

Don't

Do not throw the terminal or subject it to strong shocks/force.
Doing so may cause fire, burns, injury or electric shock.

Don't

Do not place electrically conductive objects (wires, pencil leads, etc.) in contact with the charging terminals or external connector terminal. Do not insert those materials inside the terminal.
Doing so may cause fire, burns, injury or electric shock.

Don't

Do not cover or wrap the devices with bedding, etc. while in use or charging.
Doing so may cause fire or burns.

Do

Make sure to turn off the terminal and stop charging before you get close to the places like a gas station where a flammable gas is generated.
Doing so may cause the gas to ignite. Turn off the power, when you use Osaifu-Keitai at a gas station (if the Osaifu-Keitai lock is set, turn the power off after the lock is released).

Do

If something unusual happens, such as unusual odor, overheating, discoloration or deformation during use, charge or storage, be sure to:
- **Unplug the power cord from the power outlet or the cigarette lighter socket.**
- **Turn off the power.**
- **Remove the battery pack from the terminal.**

Failure to observe these precautions may cause fire, burns, injury or electric shock.

⚠CAUTION

Don't

Do not leave the devices on a slope or unstable surface.
The devices may fall and cause injury.

Don't

Do not leave the devices in humid, dusty or hot places.
Doing so may cause fire, burns or electric shock.

Do

If your child uses the terminal, instruct him/her on how to use it. Check if he/she always uses the terminal correctly as you instruct.
Improper usage could result in bodily injury.

Do

Keep the terminal out of young children's reach.
A young child may try to swallow it or suffer injury.

Do

Pay special attention when you use the terminal connected to the adapter (including adapter for charging) for a long period.
If you use a game or watch 1Seg programs for a long time while charging, the temperature of the terminal, battery pack or adapter (including adapter for charging) may rise.
If you touch the warm part of these devices for a long period of time, it may cause redness, itch, skin irritation or low temperature burns depending on your constitution or physical condition.

2. Precautions for the Terminal

⚠WARNING

Don't

Do not direct the infrared data port towards your or another person's eyes.
Doing so may cause eye injury.

Don't

Do not direct the infrared data port towards consumer equipment with infrared devices during infrared communication.
Doing so may cause malfunction of the infrared devices and result in an accident.

Don't

Do not turn on the light near a person's eyes. Especially when photographing infants, maintain at least 1 m.
The light may affect eyesight. Also, this may dazzle or surprise him/her and cause injury.

Don't

Do not put fluids such as water or substances such as pieces of metal or flammable materials into the miniUIM slot or microSD card slot inside of the terminal.
Doing so may cause fire, burns, injury or electric shock.

Don't

Do not turn on the light against the car drivers, etc.
Doing so may interfere with driving and cause a traffic accident.

Do

Please turn off the terminal when inside an airplane, hospital, or other area where use is prohibited.
The terminal may adversely affect electronic or medical equipment.
Follow the instructions provided by the medical facility for the use of mobile phones.
Use of the phone in an airplane is prohibited, and be punished by law. However, to enable use inside an airplane such as by using a non-emission setting, follow the instructions of the airline before using.

Do

Make sure to hold the terminal at a safe distance from your ear when you talk with the speaker ON or the ring tone sounds. Also, when you play games, music, etc. with an earphone/microphone etc. connected to the terminal, adjust the volume properly.
Too large a volume may lead to defective hearing.
Also, hearing difficulties may cause an accident.

Do

If you have a weak heart, take precautions when setting the Vibrator or Ring volume.
Failure to observe this precaution may affect your heart.

Do

If you are wearing electronic medical devices, ask the manufacturer or sales agent whether the devices can be affected by radio waves before using the terminal.
The terminal may adversely affect electronic medical devices.

Do

Please turn off the terminal power near electronic equipment that contains high-precision mechanisms or handles delicate signals.
The terminal may interfere with the operation of sensitive electronic equipment.
* Electronic equipment to watch out for:
Hearing aids, implanted pacemakers, ICDs and other electronic medical devices; fire alarms, automatic doors, and other automatically controlled apparatus.
Users of implanted pacemakers, ICDs, and other electronic medical devices are advised to ask the manufacturer or sales agent whether or not these devices can be affected by radio waves.

Do

If the display or camera lens is broken, be careful with the broken glass and any exposed terminal parts.
Impact absorbent resin is used inside the display, and a plastic panel is used for the camera lens surfaces to avoid glass scattering. However, touching broken or exposed parts may cause injury.

⚠CAUTION

Don't

Do not swing the terminal by its antenna, strap or other parts.
The terminal may strike you or others around you, resulting bodily injury.

Don't

Do not use the damaged terminal.
Doing so may cause fire, burns, injury or electric shock.

Don't

When using motion sensor, make sure you are in a safe place, hold the terminal securely, and do not shake it more than necessary.
Failure to observe this precaution may cause injury.

Don't

If the display is broken and any matter leaks, do not touch it with your face, hands, etc.
Failure to observe this precaution may cause loss of eyesight or damage to your skin. If any matter comes into your eyes or mouth, immediately rinse with clean water and see a doctor.
If the liquid crystal adheres to your skin or clothing, immediately wipe it off with alcohol and wash with soap and water.

Do

Before using the terminal in a vehicle, ask the manufacturer or sales agent whether the operation of the vehicle can be affected by radio waves.
In some types of vehicle, using the terminal may interfere with the operation of the vehicle's electronic equipment. In this case, stop using the terminal immediately.

Do

There may be cases where the customer's physical condition or predisposition leads to itchiness, rashes, or sores. If this occurs, immediately stop using the terminal and see a doctor.
Material used in each part → P.20 "Material list"

Do

When viewing the display, keep a proper distance between your eyes and it in a bright place.
Failure to observe this precaution may impair your vision.

3. Precautions for the Battery Pack

■Refer to the information shown on the battery pack label to check the type of battery pack.

Display	Battery type
Li-ion00	Lithium-ion

⚠DANGER

Don't

Do not place metal items such as wires in contact with the charging terminals. Also, do not carry or store the battery with metal items such as necklaces.
Doing so may cause the battery pack to ignite, explode, overheat or leak.

Don't

Check the orientation of the battery pack before attaching it. If you have difficulty attaching it to the terminal, do not put excessive pressure on the battery.
Failure to observe this precaution may cause the battery pack to ignite, explode, overheat or leak.

Don't

Do not throw the battery pack into fire.
Doing so may cause the battery pack to ignite, explode, overheat or leak.

Don't

Do not puncture the battery pack, hit it with a hammer or step on it.
Doing so may cause the battery pack to ignite, explode, overheat or leak.

Do

If battery fluid etc. comes into contact with your eyes, do not rub your eyes but immediately rinse your eyes with clean water and see a doctor.
Failure to observe this precaution may result in loss of eyesight.

⚠WARNING

Don't

Never use the battery pack if it has fallen to have something abnormal such as deformation and damage.
Failure to observe this precaution may cause the battery pack to ignite, explode, overheat or leak.

Do

If the battery pack leaks or emits an unusual odor, stop using it immediately and move it away from any flame or fire.
The battery fluid is flammable and could ignite, causing a fire or explosion.

Do

Keep your pets away from the battery pack as they may accidentally bite it.
Failure to observe this precaution may cause the battery pack to ignite, explode, overheat or leak.

⚠CAUTION

Don't

Do not dispose of used battery packs with ordinary garbage.
Doing so may cause fire and create an environmental hazard. Put insulation tape on the terminals of used battery pack and return it to a docomo Shop or Service Counter, or dispose of the battery pack in accordance with your local regulations.

Don't

Do not use or charge the wet battery pack.
Doing so may cause the battery pack to ignite, explode, overheat or leak.

Do

If the battery pack leaks, do not touch battery fluid etc. with your face, hands, etc.

Failure to observe this precaution may cause loss of eyesight or damage to your skin. If the battery fluid etc. comes into your eyes or mouth or it adheres to your skin or clothing, immediately rinse with clean water. In the case that it comes into contact with your eyes or mouth, see a doctor immediately after rinsing.

4. Precautions for the Adapter (including adapter for charging) and Desktop Holder

⚠WARNING

Don't

Do not use the adapter (including adapter for charging) if its power cord is damaged.

Doing so may cause fire, burns or electric shock.

Don't

Do not use the AC adapter or desktop holder in humid locations such as a bathroom.

Doing so may cause fire, burns or electric shock.

Don't

The DC adapter must be used only in vehicles with a negative ground. Do not use the adapter in vehicles with a positive ground.

Doing so may cause fire, burns or electric shock.

Don't

Do not touch the adapter (including adapter for charging) when you see lightning or hear thunder.

Doing so may cause electric shock.

Don't

Do not short-circuit the charging terminals when the adapter is plugged into the power outlet or cigarette lighter socket.
Also, do not let the charging terminals contact with your body (hand, finger, etc.).
Doing so may cause fire, burns or electric shock.

Don't

Do not put heavy objects on the power cord of the adapter (including adapter for charging).
Doing so may cause fire, burns or electric shock.

Don't

When plugging/unplugging the AC adapter into/from the power outlet, make sure that no metallic straps or other metallic objects are caught between the plug and the socket.
Metallic objects may cause fire, burns or electric shock.

No wet hands

Do not touch the power cord of the adapter (including adapter for charging), desktop holder or the power outlet with wet hands.
Doing so may cause fire, burns or electric shock.

Do

Use the specified voltage and current. Use the AC Adapter for Global use to charge the battery overseas.
Using the adapters with incorrect voltage may cause fire, burns or electric shock.
AC Adapter : AC 100V
DC Adapter : DC 12V/24V
(specific to vehicle with negative ground)
AC Adapter for Global Use :
AC 100V to 240V (household AC outlet only)

Do

If the fuse in the DC adapter blows, always replace it with the specified type of fuse.
Failure to observe this precaution may cause fire, burns or electric shock. Refer to the respective manuals for the information on the specified fuse.

Do

Wipe off any dust on the plug.
Failure to observe this precaution may cause fire, burns or electric shock.

Do

When plugging the AC adapter into the power outlet, make sure to insert it firmly.
Failure to observe this precaution may cause fire, burns or electric shock.

Do

Always grasp the adapter (including adapter for charging) when unplugging the plug from the power outlet or cigarette lighter socket. Do not pull the cord itself.
Failure to observe this precaution may cause fire, burns or electric shock.

Unplug

Unplug the adapter from the power outlet or cigarette lighter socket when the adapter will be left unused for a long period.
Failure to observe this precaution may cause fire, burns or electric shock.

Unplug

If water or other liquid gets into the adapter, immediately unplug it from the power outlet or cigarette lighter socket.
Failure to observe this precaution may cause fire, burns or electric shock.

Unplug

Unplug the adapter from the power outlet or cigarette lighter socket before cleaning it.
Failure to observe this precaution may cause fire, burns or electric shock.

5. Precautions for the miniUIM

⚠CAUTION

Do

Be careful with sharp edges when removing the miniUIM.
Sharp edges may cause injury.

6. Precautions for Use Near Electronic Medical Devices

According to the Guidelines on the Use of Radio communication Equipment such as mobile phones - Safeguards for Electronic Medical Equipment established by the Electromagnetic Compatibility Conference Japan.

⚠WARNING

Do

Take care of the following inside hospitals.

- Do not take the terminal into an operating room, intensive care unit (ICU), or coronary care unit (CCU).
- Turn off the power inside hospital wards.
- Turn off the power even in hospital lobbies, waiting rooms, and corridors if electronic medical devices may be in use near you.
- For use inside medical institutions, please follow the instructions given at individual locations.

Do

Turn off the power in crowded places such as peak-hour trains if implanted pacemakers and ICDs may be in use near you.

Radio waves emitted by the terminal may adversely affect implanted pacemakers and ICDs when used in close proximity.

Do

A person with an electronic medical device such as an implanted pacemaker or ICD should use or carry the terminal at a distance more than 22 cm from the site of implantation.

Radio waves emitted by the terminal may adversely affect an electronic medical device when used in close proximity.

Do

Electronic medical devices other than implanted pacemakers and ICDs may also be used outside hospitals. Users of electronic medical devices are advised to ask the manufacturer whether these instruments can be affected by radio waves.

Radio waves from the terminal can adversely affect electronic medical devices.

■Material list

Part		Material	Surface treatment
Outer case	Display surface	Nylon resin	UV coating
	Battery side		
Side part		Aluminum	Alumite treatment
Bottom side part		Nylon resin	UV coating
Display panel		Reinforced glass	Fluorine coating
Light and infrared data port panel		PC resin	UV coating
Camera panel		Acrylic and PC composite resin	UV coating
Back cover	Outer side	PC resin	UV coating
	Water stop	Silicon rubber	Silicon coating
Keys	Power key	PC resin	Tin deposition/UV coating
	Volume key	PC resin	UV coating
External connector terminal cap	Body	PC resin, Polyester thermoplasticity elastomer	UV coating
	Water stop	Silicon rubber	Silicon coating
1Seg antenna	Top and middle sections	Stainless alloy	-
	Bottom section	Nickel titanium alloy	-
	Base hinge	Stainless alloy	-
	Antenna mounting part	Zinc alloy	Nickel plating
	Cap	ABS resin	-
	Screw	Stainless alloy	Oxidation dye
Charging terminal	Terminals	Brass	Gold plating
	Water stop	Silicon rubber	Silicon coating

Part		Material	Surface treatment
Battery pack recess	Recess	Sides: Nylon resin Bottom: Stainless alloy	-
	miniUIM tray	Housing: LCP resin Metal part: Stainless alloy	Housing: UL94V-0 Metal part: -
	Screws	Stainless alloy	-
Battery terminal	Terminal connector	Nylon resin	-
	Terminals	Phosphor bronze	Gold plating
Battery pack (terminal)	Battery pack	Resin: PP resin Label: PET resin	-
	Terminals	Glass epoxy resin	Gold plating

7. Precautions for the microUSB Cable for PC Connection (sample)

⚠DANGER

Don't

Do not use, keep or leave in a location subject to high temperatures, such as near fire, a heating appliance, in a kotatsu, in direct sunlight or inside a vehicle on a hot day.
Doing so may cause fire, burns, or injury.

Don't

Do not put in a cooking heater (microwave oven, etc.) or pressurized container.
Doing so may cause fire, burns, injury, or electric shock.

No disassembly

Do not disassemble or modify.
Doing so may cause fire, burns, injury, or electric shock.

No liquids

Do not allow to become wet with liquids such as water, beverage, or pet urine.
Doing so may cause fire, burns, injury, or electric shock.

Do

Use the battery pack and microUSB cable for PC connection specified by NTT DOCOMO for the terminal.
Failure to observe this precaution may cause fire, burns, injury, or electric shock.

⚠WARNING

Don't

Do not throw the microUSB cable for PC connection or subject it to strong shocks/force.
Doing so may cause fire, burns, injury, or electric shock.

Don't

Do not place electrically conductive objects (metal parts, pencil lead, etc.) in contact with the charging terminals or external connector terminal. Do not insert those materials inside.
Doing so may cause fire, burns, injury, or electric shock.

Don't

Do not use the microUSB cable for PC connection if its cord is damaged.
Doing so may cause fire, burns, or electric shock.

Don't

Do not use the microUSB cable for PC connection in humid locations such as a bathroom.
Doing so may cause fire, burns, or electric shock.

Don't

Do not touch the microUSB cable for PC connection when you see lightning or hear thunder.
Doing so may cause electric shock.

Don't

Do not short-circuit the USB connector of the microUSB cable for PC connection when it is inserted in a PC's USB port. Also, do not let the connector contact with your body (hand, finger, etc.).
Doing so may cause fire, burns, or electric shock.

Don't

Do not put heavy objects on microUSB cable for PC connection.
Doing so may cause fire, burns, or electric shock.

Don't

When inserting/removing the microUSB cable for PC connection in/from a PC's USB port, make sure that no metallic straps or other metallic objects contact the port.
Metallic objects may cause fire, burns, or electric shock.

No wet hands

Do not touch the microUSB cable for PC connection with wet hands.
Doing so may cause fire, burns, or electric shock.

Do

If something unusual happens, such as unusual odor, overheating, discoloration or deformation during use, charge, or storage, immediately:

- **Disconnect the microUSB cable for PC connection from the PC and the terminal.**
- **Turn off the terminal.**
- **Remove the battery pack from the terminal.**

Failure to observe these precautions may cause fire, burns, injury or electric shock.

Do

Wipe off any dust on the USB connector of the microUSB cable for PC connection.
Failure to observe this precaution may cause fire, burns, or electric shock.

Do

When inserting the microUSB cable for PC connection into a PC's USB port, make sure to insert it firmly.
Failure to observe this precaution may cause fire, burns, or electric shock.

Do

Always grasp the USB connector of the microUSB cable for PC connection when removing from a PC's USB port. Do not pull the cable itself.
Failure to observe this precaution may cause fire, burns, or electric shock.

Do

Remove the microUSB cable for PC connection from a PC's USB port when it will be left unused for a long period.
Failure to observe this precaution may cause fire, burns, or electric shock.

Do

If water or other liquid enters, immediately remove the microUSB cable for PC connection from the PC's USB port.
Failure to observe this precaution may cause fire, burns, or electric shock.

Do

Remove the microUSB cable for PC connection from the PC's USB port before cleaning it.
Failure to observe this precaution may cause fire, burns, or electric shock.

⚠CAUTION

Don't

Do not leave a connected device on a slope or unstable surface.
The devices may fall and cause injury.

Don't

Do not store in a humid, dusty, or hot place.
Doing so may cause fire, burns, or electric shock.

Do

If your child uses the microUSB cable for PC connection, instruct him/her on how to use it. Check if he/she always uses it correctly as you instruct.
Improper usage could result in bodily injury.

Do

Keep the microUSB cable for PC connection out of young children's reach.
A young child may try to swallow it or suffer injury.

8. Precautions for the microSD Card (sample)

⚠DANGER

Don't

Do not use, keep or leave in a location subject to high temperatures, such as near fire, a heating appliance, in a kotatsu, in direct sunlight or inside a vehicle on a hot day.
Doing so may cause fire, burns, or injury.

Don't

Do not put in a cooking heater (microwave oven, etc.) or pressurized container.
Doing so may cause fire, burns, injury, or electric shock.

No disassembly

Do not disassemble or modify.
Doing so may cause fire, burns, injury, or electric shock.

No liquids

Do not allow to become wet with liquids such as water, beverage, or pet urine.
Doing so may cause fire, burns, injury, or electric shock.

⚠WARNING

Don't

Do not throw the microSD card or subject it to strong shocks/force.
Doing so may cause fire, burns, injury, or electric shock.

Do

If you notice an unusual sound, odor, smoke, or overheating, immediately turn off the PC/device being used and any peripherals, unplug them from their outlet and do not touch the microSD card.
Contact the "NEC Mobiling information center" on the last page of this manual before using it again.

⚠CAUTION

Don't

Do not store in a humid, dusty, or hot place.
Doing so may cause fire, burns, or electric shock.

Don't

Keep the microSD card out of young children's reach.
A young child may swallow it and choke or suffer injury. If you think your child has swallowed it, immediately call a doctor.

Don't

Do not touch or allow metal/hard objects to contact terminals. Do not short circuit terminals.
Static electricity may cause data to become corrupted or erased.

Do

If your child uses the microSD card, instruct him/her on how to use it. Check if he/she always uses it correctly as you instruct.
Improper usage could result in bodily injury.

Do

The microSD card is formatted according to SD Card standards, and any data is erased when formatted. Keep a backup or other copy of important data in a separate place.
Failure to write/read/erase data or other error may occur if card is formatted on a PC or device that does not comply with SD Card standards.

Handling Precautions

General Notes

- **N-05D is waterproof/dustproof, however, do not allow water to seep in or dust to get in the terminal. Also, do not allow accessories and options to get wet or be exposed to dust.**
  The battery pack, adapter (including adapter for charging), desktop holder and the miniUIM are not waterproof/dustproof. Do not use them in a humid place such as a bathroom or in the rain. If you carry the terminal on your body, perspiration may corrode the internal parts of the terminal and cause malfunction. Note that if trouble is diagnosed as exposure to water or other liquid, repair of the terminal may not be covered by the Warranty or repair may not be possible. Repair, when possible, is not covered by warranty and is carried out at cost.
- **Wipe with a soft, dry cloth (such as an eyeglass cleaning cloth).**
  - Rubbing the display of the terminal with a dry cloth may scratch the display surface.
  - The display surface may be stained if moisture or dirt is left on it for a long period.
  - Never use chemicals such as alcohol, thinners, benzene or detergents as these agents may erase the printing on the terminal or cause discoloration.
- **Occasionally clean the connection terminals with a dry cotton swab, etc.**
  Soiled connectors may result in poor connections, loss of power, or incomplete charging. Wipe with dry cloth or cotton swab. Take care not to damage the terminals when cleaning.
- **Do not place the terminal near an air conditioning vent.**
  Condensation may form due to rapid changes in temperature, and this may cause internal corrosion and malfunction.
- **Do not put excessive pressure on the terminal or battery.**
  Do not put the terminal in a bag filled with many objects or sit down with it in a hip pocket.
  Excessive pressure may result in malfunction or damage to the display, internal circuit or the battery pack, etc.
  Also, if an external device is connected to the external connector terminal (earphone/microphone terminal), excessive pressure may result in malfunction or damage to the connector.
- **Do not scratch the display with metallic objects.**
  Doing so may cause scratches, malfunction or damage.
- **Read the separate manuals supplied with the battery pack and adapter (including adapter for charging) carefully.**

Handling the Terminal

- **Do not forcefully push or use a pointed object (nails, ballpen, pin, etc.) on the touch panel.**
  Doing so may damage the touch panel.
- **Avoid using the terminal in extremely high or low temperatures.**
  The ambient temperature of the room should be 5˚C to 40˚C (limited to the temporary use in a bathroom etc. when temperature is above 36˚C) with humidity of 45% to 85%.
- **Reception may be affected if you use the terminal near a land-line phone, television, or radio in use. Use the terminal away from such devices.**
- **Please keep a separate record of the information you have registered in the terminal.**
  Please be aware that DOCOMO bears no obligation or responsibility in the event that data is altered or lost.
- **Do not drop the terminal or expose it to strong shocks.**
  Doing so may cause malfunction or damage.
- **Ensure the terminal does not come near a fire (stove, etc.) or fall from a tabletop due to the vibrator.**
- **When connecting an external device to the external connector terminal (earphone/microphone terminal), do not insert at an angle or pull the cord.**
  Doing so may cause malfunction or damage.
- **It is normal for the terminal to become warm while being used or charged. This is not a malfunction. Keep using it.**
- **Do not leave the camera exposed to direct sunlight.**
  Doing so may discolor or burn the components of the camera.
- **Keep the external connector terminal (earphone/microphone terminal) cap closed when not in use.**
  Failure to observe this precaution may cause malfunction due to dust or water getting in.
- **Do not use the terminal with the back cover removed.**
  Doing so may cause the battery pack to fall out, or cause malfunction or damage.
- **Do not insert hard, sharp objects into earpiece or speaker.**
  Doing so may cause malfunction or damage to the terminal.
- **Do not remove the microSD card or turn off the power while in use.**
  Doing so may cause data loss or malfunction.
- **Do not let magnetic cards, etc. come close to terminal parts.**
  The magnetic data in cash cards, credit cards, telephone cards, floppy disks, etc. may be erased.
- **Do not let strong magnetic objects come close to the terminal parts.**
  Strong magnetic objects may cause misoperation.

Handling the Battery Pack

- **The battery pack is consumable.**
  Battery life varies depending on usage conditions, etc., but it is time to change battery packs when the usage time has become extremely short even though the battery pack has been fully recharged.
  In this case, please purchase a new battery pack.
- **The ambient temperature of the room should be 5˚C to 35˚C.**
- **The available operating time of the battery pack depends on the conditions of usage and battery pack.**
- **Depending on the usage condition, the battery pack may inflate slightly when the battery life is almost over. This is not a malfunction.**
- **Do not store the battery pack in the following cases:**
  - The battery is fully charged (immediately after the charging is complete)
  - The battery has run out (the terminal cannot power on)

  The performance and life of the battery pack may deteriorate.
  It is recommended that you store the battery pack with around 40% battery level.

Handling the Adapter (including adapter for charging)

- **The ambient temperature of the room should be 5˚C to 35˚C.**
- **Do not charge the battery pack:**
  - In a humid, dusty or unstable place
  - Near a land-line phone, TV or radio
- **It is normal that the adapter (including adapter for charging) become warm while charging. Keep using it.**
- **Do not use the DC adapter to charge the battery when the car engine is not running.**
  Doing so may drain the car battery.
- **If you use an electrical outlet with an unplugging-protection mechanism, follow the instructions of the manual for the outlet.**
- **Do not expose the adapter to strong shocks. Do not deform the charging terminal.**
  Doing so may cause malfunction.

Handling the miniUIM

- **Do not apply excessive force to the miniUIM when attaching/removing it.**
- **Note that the warranty does not cover damage caused by inserting the miniUIM into another type of IC card reader or writer.**
- **Always keep the IC part clean.**
- **Wipe with a soft, dry cloth (such as an eyeglass cleaning cloth).**
- **Please keep a separate record of the information you have registered in your miniUIM.**
  Please be aware that DOCOMO bears no obligation or responsibility in the event that data is altered or lost.
- **To preserve the environment, bring discarded miniUIM to a docomo Shop or Service Counter.**
- **Do not damage, scratch, unnecessarily touch, or short-circuit the IC portion.**
  Doing so may cause data loss or malfunction.
- **Do not drop the miniUIM or expose it to strong shocks.**
  Doing so may cause malfunction.
- **Do not bend the miniUIM or place a heavy object on it.**
  Doing so may cause malfunction.
- **Do not put a label or sticker on the miniUIM when attaching it to the terminal.**
  Doing so may cause malfunction.

Using the Bluetooth® Function

- **To secure the Bluetooth communication security, the terminal supports the security function compliant with Bluetooth standards, but the security may not be sufficient depending on the setting. Concern about the communication using the Bluetooth function.**
- **Please be aware that DOCOMO is not responsible for data leak when making data communications using Bluetooth.**
- **Frequency band**
  The following are frequency bands that the terminal's Bluetooth function uses:

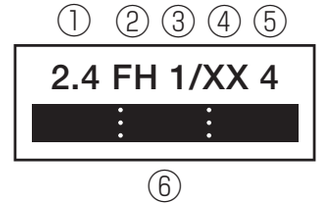

① 2.4	: The radio equipment uses the 2400 MHz band.
② FH	: Modulation scheme is the FH-SS system.
③ 1	: The estimated interference distance is 10 m or less.
④ XX	: The modulation scheme is a different scheme.
⑤ 4	: The estimated interference distance is 40m or less.

⑥ ■■■■■ : The full band between 2400 MHz and 2483.5 MHz is used and the band of the mobile identification device cannot be avoided.

■Bluetooth cautions

The operating frequency band of the terminal is used by industrial, scientific, consumer and medical equipment including microwave ovens, premises radio stations for identifying mobile units used in the manufacturing lines of plants (radio stations requiring a license), specified low power radio stations (radio stations requiring no license) and amateur radio stations (hereinafter referred to as "another station").

1.Before using the terminal, confirm that "another station" is not being operated nearby.

2.In the event of the terminal causing harmful radio wave interference with "another stations", promptly change the operating frequency or stop radio wave emission by turning off the power, etc.

3.If you have further questions, please contact General Inquiries on the last page of this manual.

When Using a Wireless LAN

- **A wireless LAN (WLAN) uses radio waves for transmission, and thereby has the benefit of allowing a LAN connection anywhere in an area reachable by radio waves. Conversely, eavesdropping by a third party or wrongful intrusion are possible if security settings are not configured. Users are recommended to use discretion and configure security settings before using.**
- **Wireless LAN**

  Do not use wireless LAN near magnetic devices such as electrical appliances or AV/OA devices, or in radio waves.
  - Magnetism or radio waves may increase noises or disable communications (especially when using a microwave oven).
  - When used near TV, radio, etc., reception interference may occur, or channels on the TV screen may be disturbed.
  - If there are multiple wireless LAN access points nearby and the same channel is used, search may not work correctly.

● **Frequency band**

The frequency band used by the WLAN device is indicated on a label in the battery pack recess of the terminal. The following figure explains the indications on the label.

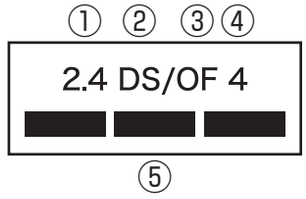

① 2.4 : This radio equipment uses the 2400MHz band.

② DS : Modulation scheme is the DS-SS system.

③ OF : Modulation scheme is the OFDM system.

④ 4 : The estimated interference distance is 40m or less.

⑤ ▬▬▬ : The full band between 2400MHz and 2483.5MHz is used and the band of the mobile identification device can be avoided.

- Available channels vary depending on the country.
- For use in an aircraft, contact the airline beforehand.
- For use of WLAN in a foreign country, the country may have limitations on such as frequencies and locations where you can use it. Before using WLAN in a foreign country, confirm the available frequencies, laws, regulations, and other conditions for use of WLAN of the country.

■2.4 GHz device cautions

The operating frequency band of this WLAN device is used by home electrical appliances such as microwave ovens, as well as industrial, scientific and medical equipment including private radio stations on factory premises for identifying mobile units used in manufacturing lines (radio stations requiring a license), specified low power radio stations (radio stations requiring no license), and amateur radio stations (radio stations requiring a license).

1.Before using the device, confirm that private radio stations for identifying mobile units, specified low power radio stations and amateur radio stations are not being operated nearby.

2.If the device causes harmful radio interference to private radio stations for identifying mobile units, immediately change the frequency band or stop use, and contact "docomo Information Center" described on the last page of this manual for crosstalk avoidance, etc. (e.g. partition setup).

3.If the device causes radio interference to specified low power radio stations or amateur radio stations, contact "General Inquiries" described on the last page of this manual.

Handling the FeliCa Reader/Writer

- **The FeliCa reader/writer function of the terminal handles delicate signals that require no radio station license.**
- **The 13.56 MHz frequency band is used. If there is another reader/writer near the terminal, keep enough distance between the terminal and the reader/writer. Also, make sure that there is no radio station using the same frequency band nearby.**

Samples (microUSB Cable for PC Connection and microSD Card)

- **Keep away from liquids and moisture.**
  The microUSB cable for PC connection and microSD card are not waterproof. Do not use these devices in the rain or in other humid places (e.g. bathrooms). When carrying them near your body (pockets, etc.), moisture from sweat may corrode internal parts and cause malfunction.
- **Do not place near an air conditioner vent.**
  Condensation may form due to abrupt temperature changes, leading to internal corrosion and malfunction.
- **Maintain metal terminals in a clean state.**
- **Clean with a dry, soft cloth (for glasses, etc.).**
- **Do not scratch, touch, or short-circuit the metal terminals.**
  Doing so may erase data or cause malfunction.
- **Clean the terminals of the microUSB cable for PC connection with a dry cotton swab periodically.**
  Soiled terminals may cause poor contact, resulting in insufficient charging or the terminal to turn off. Take care not to damage the terminals when cleaning.
- **Do not hang or pull the terminal by the microUSB cable for PC connection.**
- **Charge in a place with adequate temperature (5°C to 35°C).**
- **Do not charge in the following places:**
  - Places with much humidity, dust, or vibration
  - Near a telephone, TV, radio, etc.
- **Although the microUSB cable may become warm during charging, it is not a malfunction. You can continue using it.**
- **Do not subject to strong impacts. Do not deform the USB connector of the microUSB cable for PC connection.**
  Doing so may cause malfunction.
- **Use only the force necessary when inserting/removing the microSD card.**
- **You should keep a separate backup of information saved on the microSD card.**
  NTT DOCOMO will bear no liability for any loss of saved data.

- **Do not bend or place heavy objects on the microSD card.**
  Doing so may cause malfunction.
- **Do not remove the microSD card or turn off the terminal while the microSD card is being accessed.**
  Doing so may erase data or cause malfunction.
- **Do not insert the microSD card in a device with stickers or labels adhered to it. You may be unable to insert/remove it in/from a device or it may result in poor contact.**
- **Using the microSD card for a long period or repeatedly may cause data reading/writing failure or slower operation.**
- **Samples are not covered under repair warranty.**

Cautions

- **Do not use the altered terminal. Using an altered device is a violation of the Radio Law.**
  A "Technical Conformity Mark ㊣" affixed on the manufacturer's specification sticker certifies that the terminal meets technical regulations for specified radio equipment based on the Radio Law. If you remove the screws and alter the inside of the terminal, the technical regulations conformity certification becomes invalid. Do not use the terminal with the certification invalid, as it is a violation of the Radio Law.
- **Be careful when using the terminal while driving.**
  A penalty may be imposed for holding a mobile phone while driving. However, exceptions are made in case of emergency, such as to safeguard injured persons or to maintain public safety.
- **Use the FeliCa reader/writer function only in Japan.**
  The FeliCa reader/writer function of the terminal complies with radio standards of Japan. You may be punished if you use it overseas.
- **Do not attempt to alter the basic software.**
  Repair of malfunction may be refused if the software is found to be altered.

Waterproof/Dustproof Function

N-05D is waterproof to IPX5[*1] and IPX8[*2] and dustproof to IP5X[*3] standards if the external connector terminal cap is closed as well as the back cover is securely attached.

*1 IPX5 means that the N-05D continues to function as a phone after being sprayed from all directions with 12.5 liters of water per minute from a 6.3 mm diameter nozzle for at least 3 minutes, from a distance of approx. 3 meters.

*2 IPX8 means that the N-05D retains phone functionality after slowly immersing in still, room-temperature tap water to a depth of 1.5 meter and leaving it there for approx. 30 minutes before bringing it out of the water.

*3 IP5X means that the N-05D continues to function as a phone and to maintain security after being left in a device containing dust (diameter of 75 μm or smaller) for 8 hours, agitated and removed.

- You can talk or watch 1Seg without an umbrella in the rain (approx. 20 mm of rain in an hour).
- Do not attach/remove the back cover or do not open/close the external connector terminal cap when your hands are wet or when the terminal has water drops on it.
- You can rinse the terminal by immersing and slowly moving in tap water of room temperature filled in a bowl, or rinse it with hands under light running water from the faucet.
  - Rinse the terminal with the back cover securely attached while covering the external connector terminal cap to prevent it from opening.
  - Do not use a brush, sponge, soap, or detergent for washing.
  - Do not apply running water directly to the mouthpiece or earpiece or speaker.
- If salt water, sea water, mud or dirt gets on the terminal, wash off immediately. May be more difficult to remove when dry/hard, and may scratch/damage the terminal.
- You can use the terminal in the bathroom. However, do not immerse it in the bathtub.
  - Never immerse the terminal in hot spring water or water containing soap, detergent or bath powder.
  - Avoid using the terminal for a long time in the bathroom.

Things to keep in mind

- Before use, ensure that you securely close the external connector terminal cap and back cover so that they are completely attached. If any fine dirt (fine fibers, hairs, or sands) is between the cap/cover and the terminal, water or dust could enter the inside of the terminal.
- Do not spray or immerse the terminal in liquids other than water of room temperature as illustrated below.

<Example>

Soap/Detergent/
Bath powder

Sea water

Hot spring

Opening/closing the external connector terminal cap

■Opening

Hook your finger on the slot and open the cap in the direction of arrow.

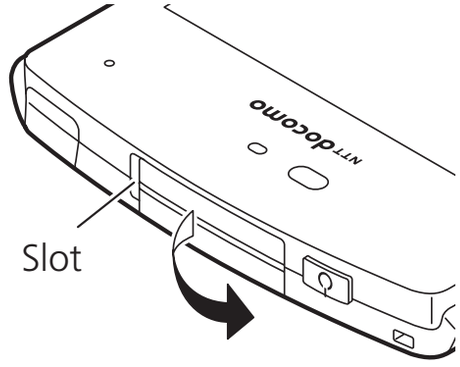

■Closing

Close the cap by pressing the whole cap securely as shown.

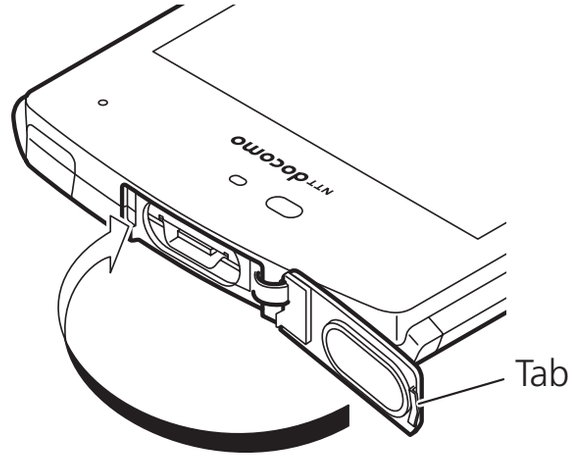

Attaching/removing the back cover

■Attaching

1 Insert the tabs on the back cover in direction ① and press firmly in direction ②

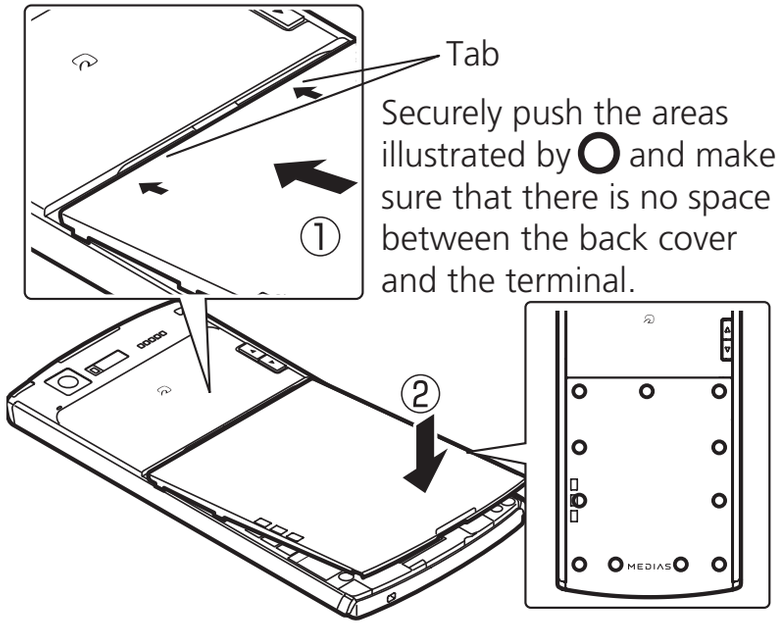

■Removing

1 Hold the terminal, then hook your finger in the slot and lift in direction ①

2 Insert your finger in the gap formed and remove gently as shown

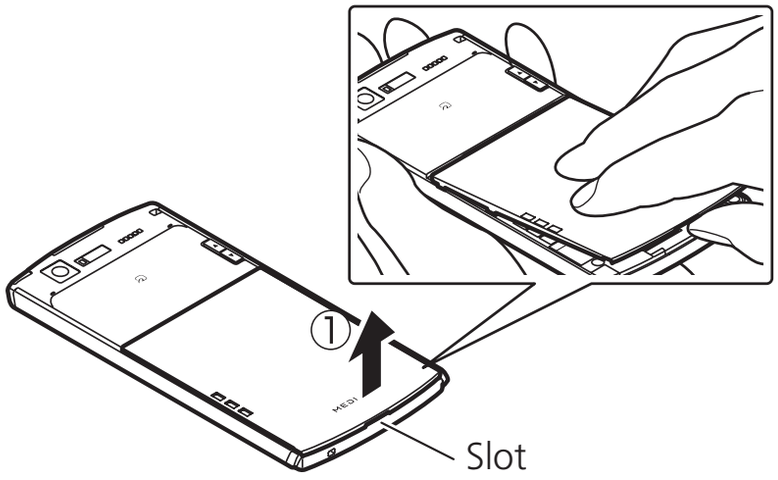

NOTE

- When removing the back cover, make sure that you drain water and wipe moisture off the terminal.
- When attaching the back cover, make sure that no dust or dirt adheres to the back cover (especially to the rubber packing).
- Water/dust might enter the inside of the terminal unless you attach the back cover securely.
- When attaching the back cover, make sure that the miniUIM, the microSD card and the battery pack are attached securely. If the miniUIM or microSD card is not securely inserted, the battery pack sits on the miniUIM or microSD card which causes a gap between the terminal and the back cover when attaching the back cover. The waterproof/dustproof function might deteriorate because of the gap.

To maintain waterproof/dustproof function, replacement of parts is required once every 2 years regardless of whether the terminal appears normal or abnormal.
DOCOMO replaces the parts as a chargeable service. Bring the terminal to a repair counter specified by DOCOMO.

Important notices

- If the terminal gets wet with water or other liquids with the external connector terminal cap or the back cover open, the liquid may get inside the terminal causing electric shock or malfunction. Stop using the terminal, turn off the power, remove the battery pack and contact a repair counter specified by DOCOMO.
- The external connector terminal cap and the rubber packing of the back cover play an important role in maintaining waterproof/dustproof function. Do not remove or scratch them. Also, prevent dust from adhering to them. If the external connector terminal cap and the rubber packing of the back cover is damaged or deformed, replace it at a repair counter specified by DOCOMO.
- Do not insert sharp objects through the gap of the external connector terminal cap or back cover. Doing so may damage the rubber packing and allow water/dust to seep in.
- If the back cover is damaged, replace it. Water may seep into the inside of the terminal through a damaged section causing electric shock, corrosion of the battery pack, or other malfunctions.
- Do not leave the terminal with water drops. In cold places, water may freeze and cause malfunction.
- To prevent condensation, do not bring the terminal from a cold place to a bathroom, etc. without letting the terminal get back to room temperature.
- Do not apply water flow stronger than allowed (e.g., such water flow that gives you pain when applied to your skin directly from a faucet or shower head). Doing so may cause malfunction though N-05D is waterproof to IPX5 standard (P.35).
- Do not wash the terminal in a washing machine etc.
- Do not put the terminal in hot water, use it in a sauna or apply hot air flow (from a hair dryer etc.) to it.
- Do not poke the mouthpiece, earpiece or speaker with cotton swabs or sharp objects. The waterproof/dustproof function may deteriorate.
- The terminal does not float on water.
- Do not drop the terminal. Scratches may lead to lowered waterproof/dustproof capability.

- Do not leave water on the mouthpiece, earpiece or speaker. If water adheres to the terminal, the volume during a call or ringtone may be decreased or sound quality may deteriorate. In such a case, drain the water to recover the function.
- DOCOMO does not guarantee all operations under actual use conditions. Malfunctions deemed to be caused by inappropriate operation by the customer are not covered by the warranty.
- Even if the back cover is securely attached, removing the sealing shown may result in a loss of waterproof capability. Do not remove sealing.

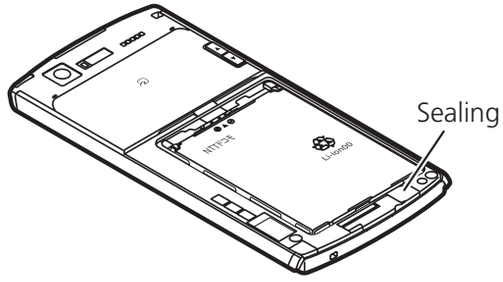

Draining water when the terminal gets wet

When the terminal gets wet, drain the water following the steps below.

- If water adheres to the mouthpiece, earpiece or speaker, the volume of the other party's voice or melody may be decreased or sound quality may deteriorate. In such a case, drain the water following the steps below and dry the terminal in open air to recover the function.

1 Wipe the surface of the terminal with a clean dry cloth, etc.

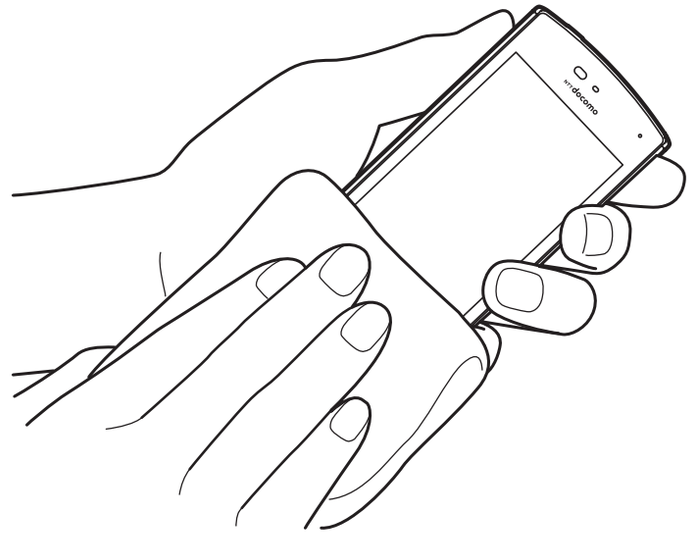

2 Securely hold the terminal and shake it approx. 20 times until there is no more water splattering

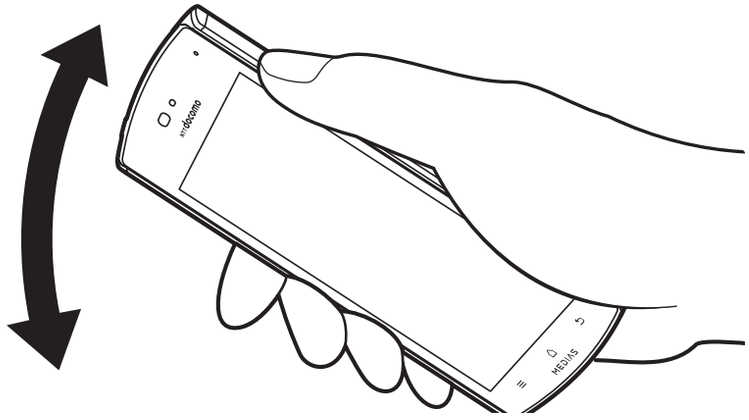

<Draining from mouthpiece or earpiece>

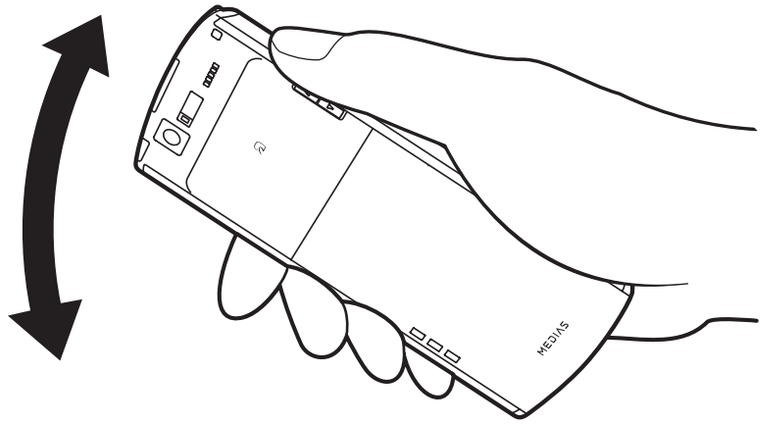

<Draining from speaker>

3 Softly press a clean dry cloth etc., on the terminal to wipe off water remaining in the mouthpiece, earpiece or speaker

- Do not wipe off water remaining in gaps directly with a cotton swab etc.

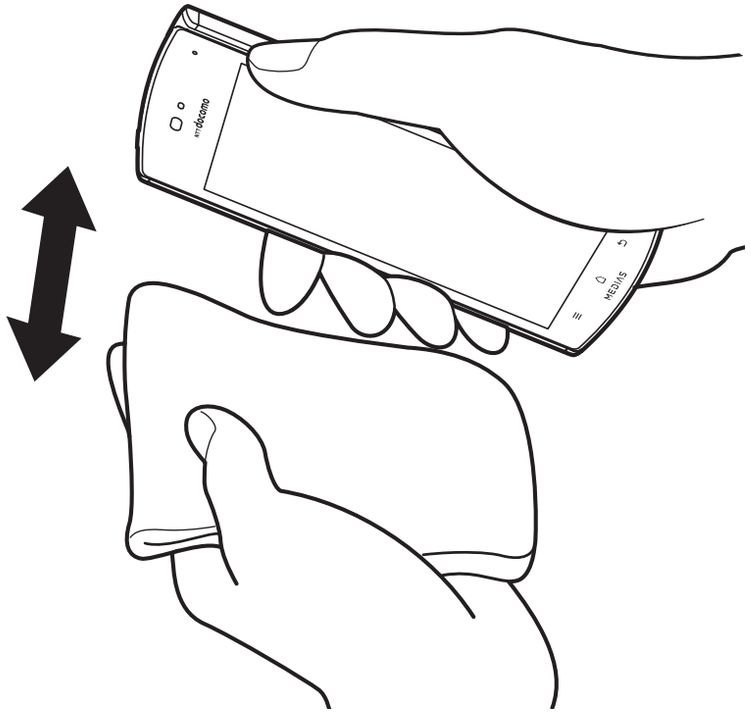

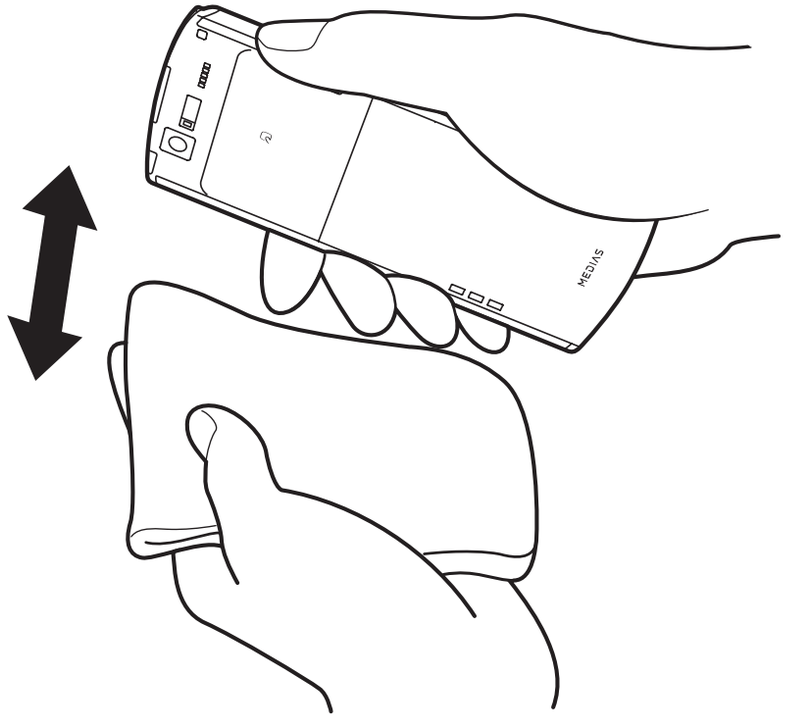

4 Thoroughly wipe off water drained from the terminal with a clean dry cloth, etc.

- Water, if any, remaining in the terminal may leak out after wiping off.

When charging the battery

Accessories and options are not waterproof/dustproof. Check the following before and after charging.

- Make sure that the terminal is not wet. If the terminal is wet, thoroughly drain the water and wipe off with a clean dry cloth, etc. before placing it on the provided desktop holder or opening the external connector terminal cap.
- When the external connector terminal cap is opened for charging, close the cap securely after charging. It is recommended that the desktop holder be used for charging to prevent water from seeping in or dust from entering through the external connector terminal.
  - Never try to charge the battery pack when the terminal is wet.
  - Do not touch the AC adapter or desktop holder with wet hands. Doing so may cause electric shock.
  - Use the AC adapter or desktop holder in a place free from water splashes. Do not use them in a bathroom, shower room, kitchen, washroom and other places subject to water. Otherwise, it may cause fire or electric shock.

Part Names and Functions

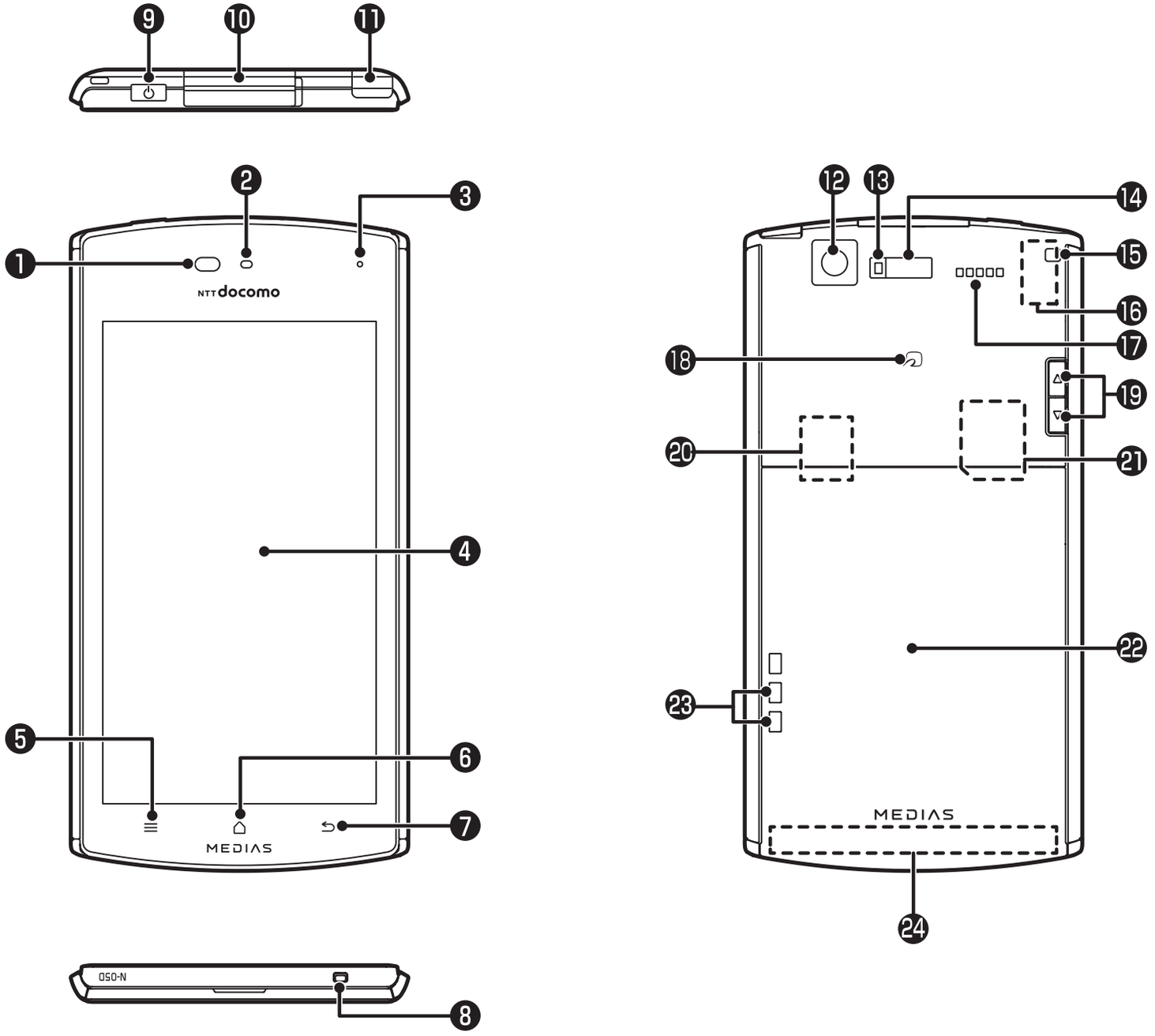

❶Proximity/Illuminance sensor

- Hides tappable icons on the touch panel when your face comes close to the touch panel. This prevents you from unintentionally activating functions when you are engaged in a call.
- Detects the brightness around the terminal and automatically adjusts the illuminance of the display. → P.108

* Do not put labels or stickers on the sensors.

❷Earpiece (receiver)

❸Notification LED

- Charging → P.53
- Incoming call (incoming call lamp) → P.109
- Missed calls, new mail (notification lamp) → P.109

❹Display (Touch panel)

- Allows you to scroll the screen on the display or tap to select objects. → P.55

❺ ≡ Menu key → P.56

❻ ⌂ Home key → P.56

❼ ⮌ Back key → P.56

❽Mouthpiece/microphone

❾Power key

- Powers the terminal on/off or sets it in sleep mode.

❿External connector terminal

- Provides connections to the adapters, earphone/headphone, and PC, etc.

⓫1Seg antenna

- For 1Seg reception. → P.149

⓬Camera

- You can use the camera to take videos or photos. → P.138

⓭Light

- Turn it on when taking a picture as needed.

⓮Infrared data port

- Serves for infrared data exchange. → P.130

⓯Strap slot

⓰GPS / Wi-Fi / Bluetooth antenna*

⓱Speaker

⓲ mark

- Put the mark close to the reader when using Osaifu-Keitai. → P.153

⓳Volume key

- Adjusts the volume.

⓴microSD card slot

- Set the microSD card to the slot. → P.46

㉑miniUIM slot

- Insert a miniUIM here. → P.44

㉒Back cover

㉓Charging terminal

㉔FOMA antenna*

* The antennas are built-in. To ensure good signal quality, avoid covering the antenna section with your hands.

miniUIM

miniUIM is an IC card that stores your phone number and other information. Only a miniUIM can be used on the terminal. Exchange your miniUIM or FOMA card at a docomo Shop Service Counter.

- Some functions are not available if the miniUIM is not inserted.
- For details on the miniUIM, refer to the manual for the miniUIM.
- You should insert/remove the miniUIM after turning the power off and removing the battery pack (P.47). Hold the terminal firmly in your hand.

1 By holding the tab of the tray, pull out the tray

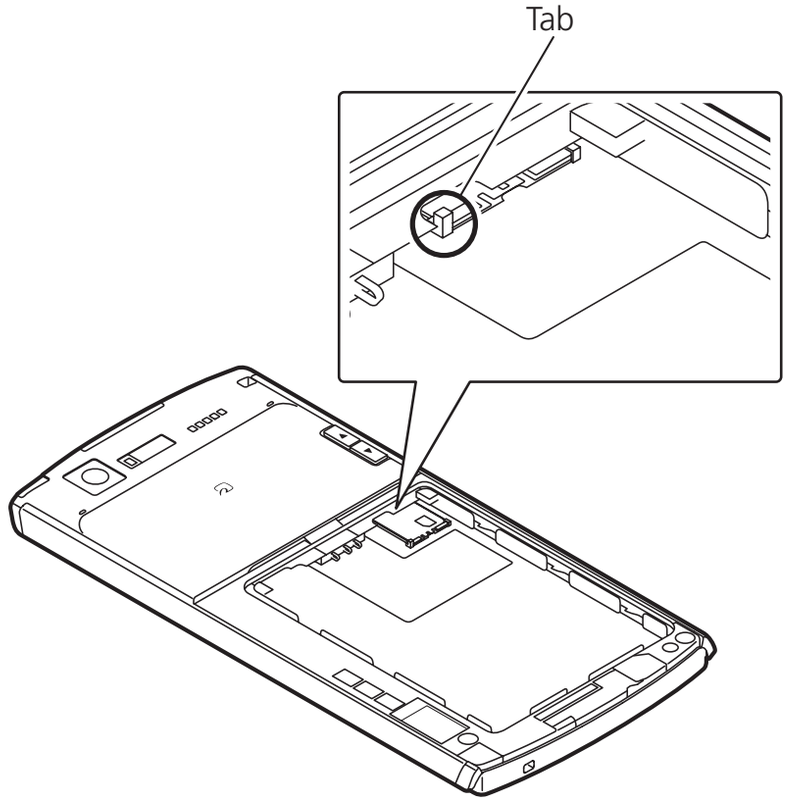

2 IC side facing up, place the miniUIM on the tray

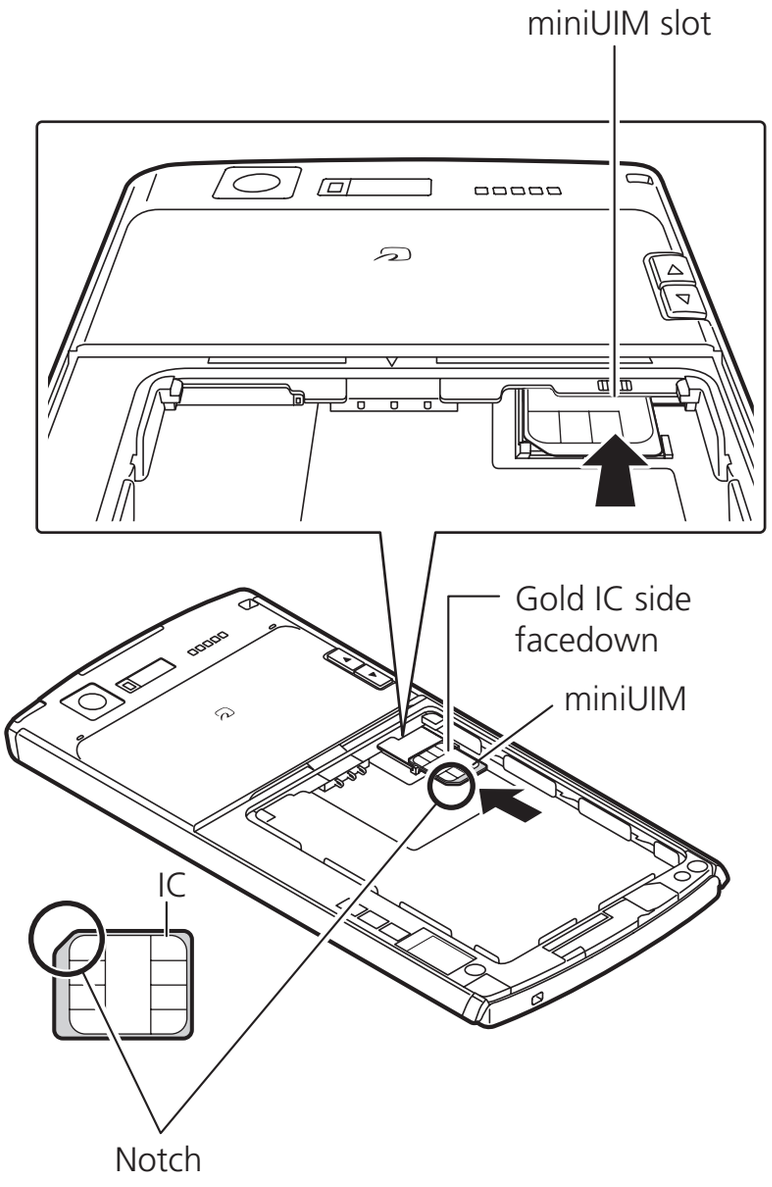

3 Push the tray in all the way

NOTE

- Do not insert/remove miniUIM forcefully. May damage miniUIM.

microSD Card

You can save data in the terminal to microSD card or transfer data on a microSD card to the terminal.

- The N-05D supports a microSD card of up to 2 GB, and a microSDHC card of up to 32 GB (as of February 2012). Refer to the following website for information on the latest operation check information, including microSD card manufacturers and card capacities.
  http://www.n-keitai.com/ (in Japanese only)
  Given information is the result of operation checks, and is not a guarantee of operation. For microSD cards other than those given, inquire with the manufacturer of each microSD card.

Before using a microSD card

Make sure to format microSD card on N-05D. You may not be able to use microSD card formatted on another terminal or PC. → P.115

- Note that formatting the microSD card deletes all data in it.
- Be sure to make a backup or otherwise separately store data saved to a microSD card. If saved data becomes lost or is altered, DOCOMO will not be held liable.

- Do not turn off the power while the microSD card is being accessed. The data may be destroyed or the card may no longer function properly.
- Data from another device saved to microSD card may not be displayable or playable on the terminal. Data saved to microSD card from the terminal may also not be displayable or playable on another device.
- You should insert/remove a microSD card after turning the power off and removing the battery pack (P.48). Hold the terminal firmly in your hand.

■Attaching

1 Insert the microSD card into the microSD card slot until it is locked

- Insert the microSD card into the slot slowly and straight in with the metal contacts facing down. When the card is fully inserted, it is locked.

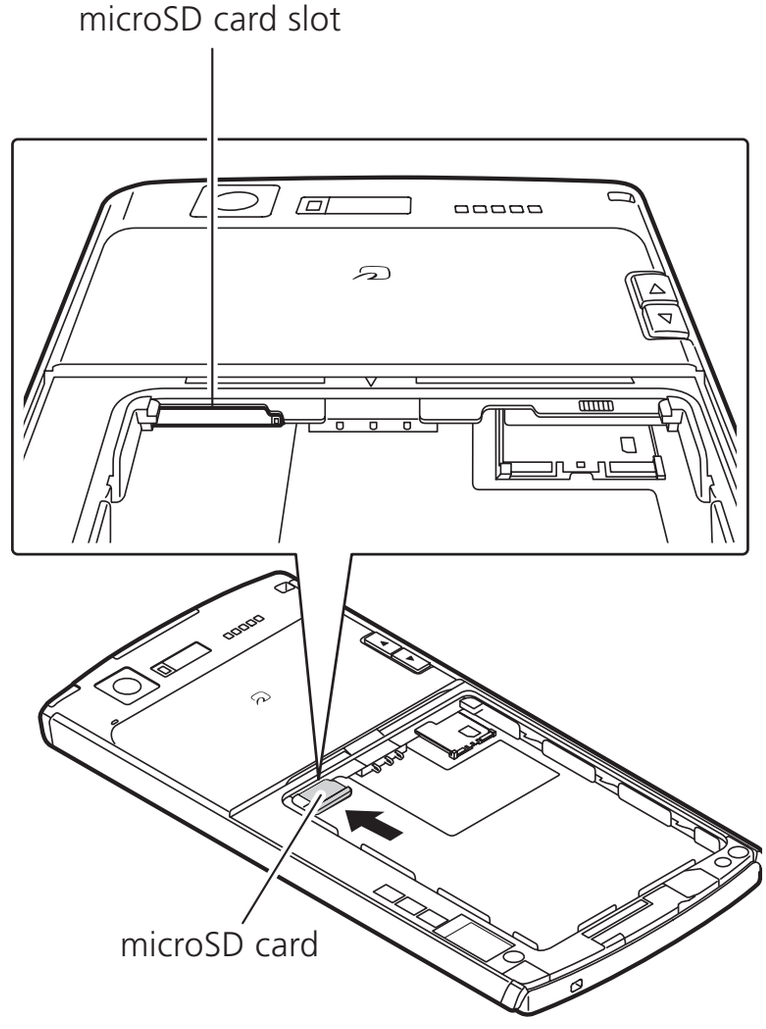

■Removing

1 Push the microSD card in, and then release it

- The microSD card comes out slightly. Note that the card may jet completely out of its slot.

2 Hold the microSD card at its groove, and then pull it straight out slowly

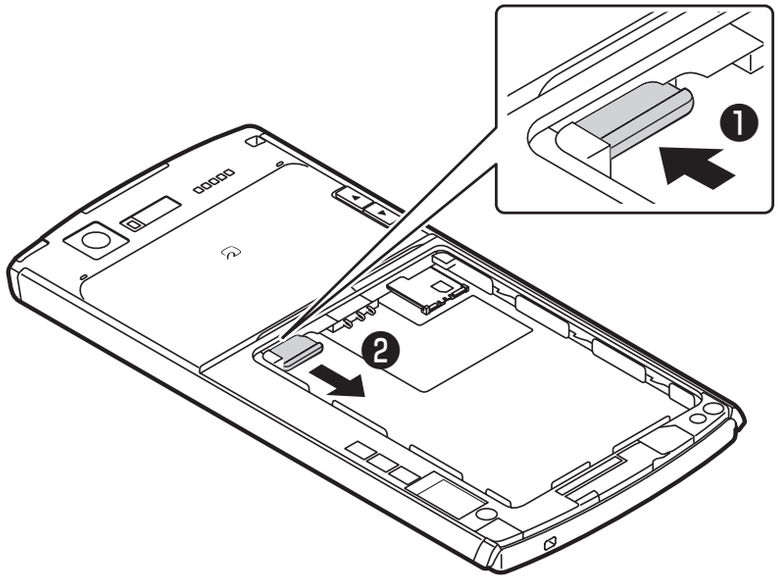

Battery Pack

- Use the Battery Pack N32 for the terminal.
- You should insert/remove the battery pack after turning the power off. Hold the terminal firmly in your hand.
- Attaching/removing the back cover → P.37

■Attaching

1 With the product name side facing up, insert the concave portion of the battery pack into the convex portion of this terminal and install it in direction ① so that the metal terminals on the battery pack and the terminal are aligned. Then set the battery pack in direction ②

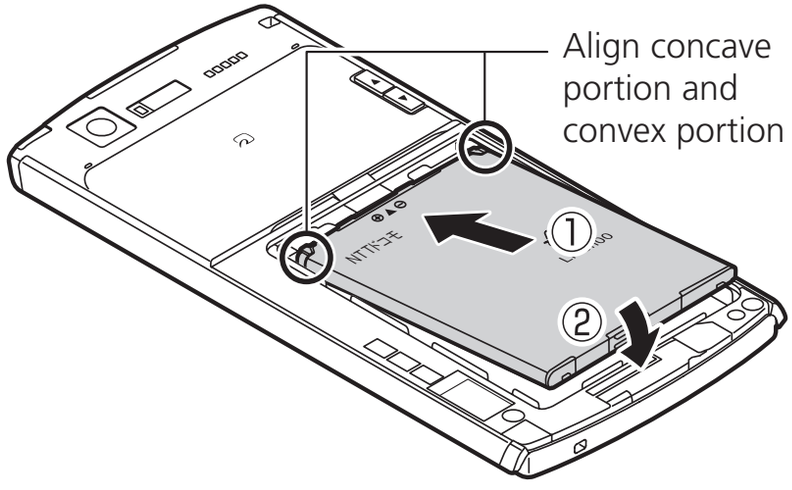

NOTE

- Do not press forcefully if concave portion and convex portion are not aligned. Doing so may cause damage to the concave-convex portion and metal terminals.

■Removing

1 Push the tab of the battery pack in the direction ① then pull it up in the direction ②

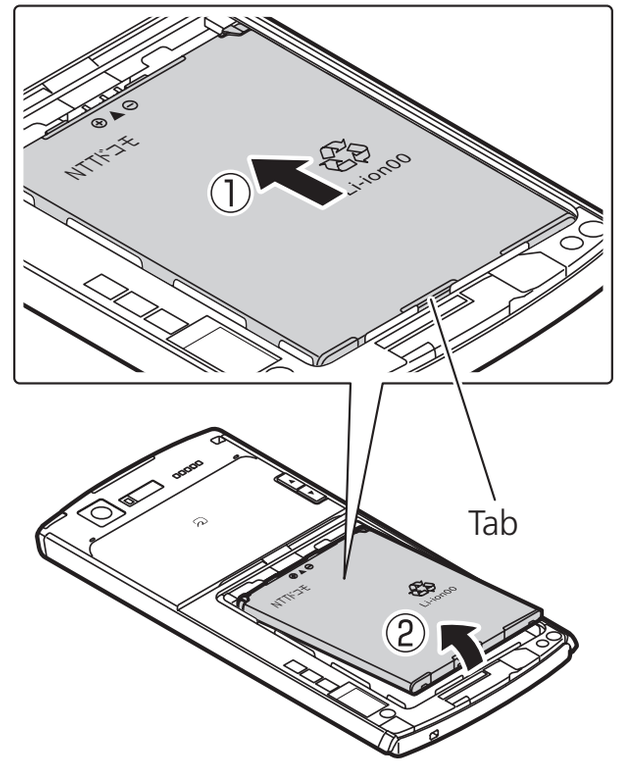

Charging

● The battery pack is not fully charged at time of purchase. Be sure to fully charge before use.

■Battery charging

- For more details, see the respective manuals of the FOMA microUSB Adapter N01 for charging, the FOMA AC Adapter 01/02 (optional), the FOMA AC Adapter 01 for Global use (optional) and the FOMA DC Adapter 01/02 (optional), the AC Adapter 03 (optional) and the DC Adapter 03 (optional).
- The FOMA AC Adapter 01 is only compatible with AC 100V. The FOMA AC Adapter 02 and the FOMA AC Adapter 01 for Global use, and the AC Adapter 03 are compatible with AC 100V-240V.
- The AC adapter has an AC 100V plug (Japanese specification). When using an AC 100-240V adapter overseas, you will need a converter plug adapter compatible with local voltage. Do not charge the terminal using a travel transformer.
- You must attach the battery pack to the terminal if you want to charge it.
- Do not force the connector when inserting/pulling it out. Instead, insert or pull it out slowly.
- If you start charging when the battery pack is empty, you may not be able to power ON the terminal for a while.
- Charging may stop before the remaining capacity of the battery reaches 100% depending on the status of use. In that case, terminate all functions in use and charge the battery again. Remove the FOMA microUSB Adapter N01 for charging or the microUSB cable for PC connection (sample) from the terminal and attach it again before charging.

■Charging time (estimate)

Charging time is an estimate of the time required to charge a completely empty battery pack while the terminal is powered off.

FOMA AC Adapter 01*/02* AC Adapter 03	Approx. 200 minutes
FOMA DC Adapter 01*/02* DC Adapter 03	Approx. 200 minutes

* Charging when connected to FOMA microUSB Adapter N01 for charging.

■Usage time when fully charged (estimate)

Usage time differs with the operating environment and the condition of the battery pack.

● Usage time for the terminal becomes shorter as you view 1Seg or use GPS.

Continuous standby time
FOMA/3G • Stationary (Automatic):Approx. 320 hours GSM • Stationary (Automatic):Approx. 220 hours
Continuous call time
FOMA/3G: Approx. 320 minutes GSM: Approx. 330 minutes
Continuous 1Seg viewable time
Approx. 290 minutes

■Battery pack life

- The battery pack is a consumable accessory. The usage time of the battery per 1 charge decreases gradually each time the battery is recharged.
- When the usage time from 1 charge becomes about half of a new battery pack, the life of the battery pack is assumed to be almost over. We recommend that you replace the battery ahead of time. Depending on the usage condition, the battery pack may inflate slightly when the battery life is almost over. This is not a malfunction.
- If you view 1Seg while charging for a long period, the life of the battery pack may decrease.

Li-ion00

■Waterproof/dustproof capability

- The battery pack, AC adapter, and supplied desktop holder are not waterproof/dustproof. You must not charge when the terminal is wet.
- To prevent intrusion of water/dust from the external connection terminal, charging is recommended using the desktop holder.
- After charging is completed, securely close the external connection terminal cap. Otherwise, water/dust may enter.

Charging with the Desktop Holder

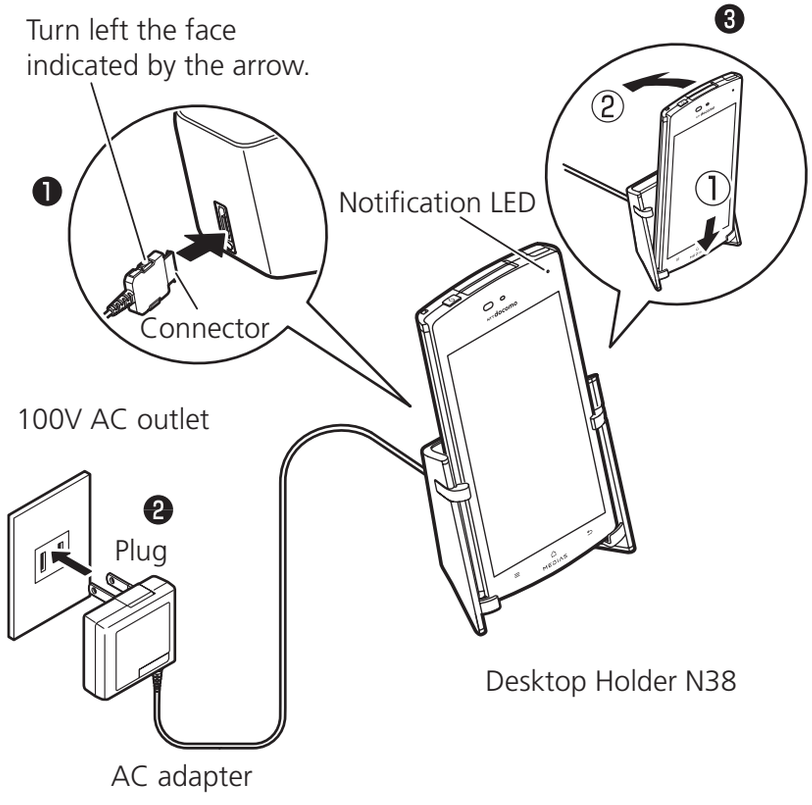

1 **Insert the connector of the AC adapter (optional) horizontally into the terminal on the back of the desktop holder**

2 **Plug the AC adapter into an outlet**

3 **Keep holding the desktop holder and insert the terminal to the direction ① then to the direction ② securely as shown**

4 **Once charging completes, keep holding the desktop holder, tilt the terminal in direction of arrow and then remove from it**

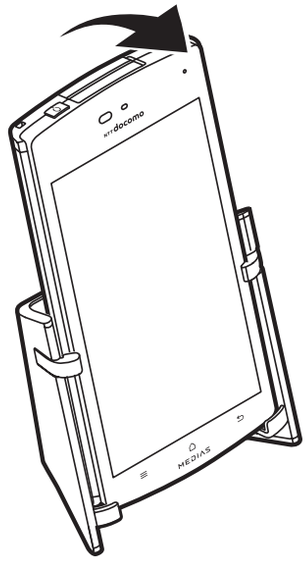

Charging with the AC adapter/DC adapter

● Be sure to refer to the manuals for the FOMA AC Adapter 01/02 (optional), FOMA DC Adapter 01/02 (optional), AC Adapter 03 (optional), and DC Adapter 03 (optional).

<Example: When charging with the FOMA AC Adapter 01/02 or FOMA DC Adapter 01/02>

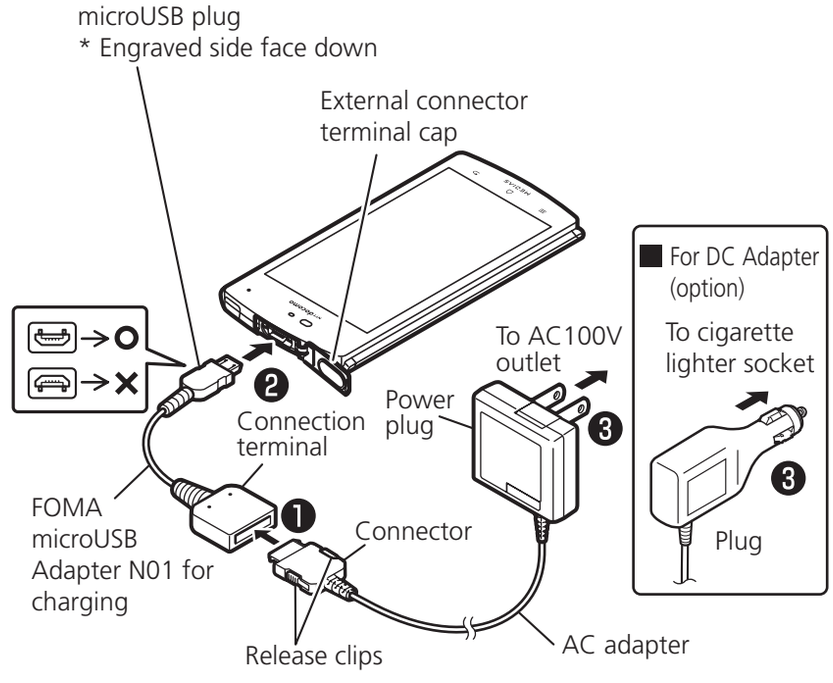

1 **Insert the AC adapter/DC adapter connector horizontally into the connection terminal of the FOMA microUSB Adapter N01 for charging**

- Insert the connector with the engraved side facing up horizontally into the connection terminal with print side facing up.

2 Open the external connector terminal cap (P.36), and plug the microUSB plug of the FOMA microUSB Adapter N01 for charging horizontally into the terminal's external connector terminal

- Insert the microUSB plug horizontally with the engraved side facing down.

3 Insert the AC adapter plug horizontally into the power outlet/the DC adapter plug into the car's cigarette lighter socket

4 When charging is completed, unplug the AC adapter from the outlet/ the DC adapter from the cigarette lighter socket

5 Remove the AC adapter/DC adapter connector horizontally from the connection terminal of the FOMA microUSB Adapter N01 for charging

6 Remove the microUSB plug straight from the terminal and close the external connector terminal cap (P.36)

Charging with the microUSB cable for PC connection

You can charge the terminal by connecting the terminal and a PC with the microUSB cable for PC connection (sample).

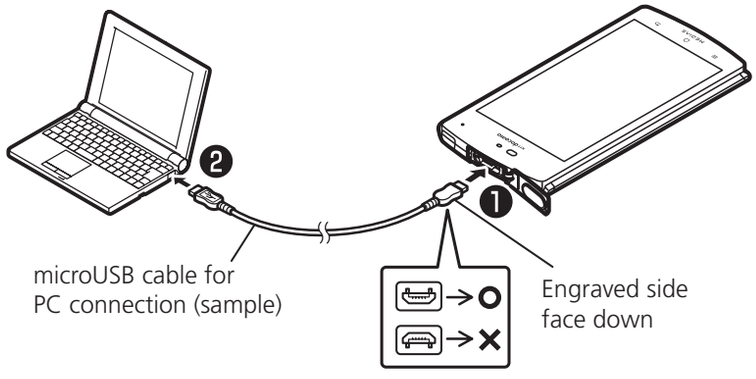

1 Open the external connector terminal cap (P.36), and plug the microUSB plug of the microUSB cable for PC connection horizontally into the external connector terminal of the terminal

- Insert the microUSB plug horizontally with the engraved side facing down.

2 Insert the other USB plug of the microUSB cable for PC connection horizontally into the PC USB port

3 When charging is completed, remove the microUSB plug horizontally from the terminal and close the external connector terminal cap (P.36)

4 Remove the USB plug horizontally from the PC USB port

NOTE

- If charging starts with power off, it may take some time for charging to start.
- When you have finished charging, pull the connected cable from the outlet and the terminal.

<Notification LED>

- Notification LED turns red while charging, green when the battery level is over 90%, and off when charging is complete.

<DC adapter>

- The DC adapter takes a 2A fuse. If the fuse (2A) blows, be sure to replace with a designated fuse. The fuse (2A) is a consumable and can be purchased at a local car dealer.

<microUSB cable for PC connection>

- If you perceive noise interference from a radio or similar device while charging, distance the microUSB cable for PC connection from the radio, antenna, etc.
- Do not use the microUSB cable for PC connection to connect the terminal and a PC in regions where its use is prohibited.

Turning Power ON and OFF

■Turning power ON

1 Press the power key for 2 seconds or longer

- When turning power on for the first time, the initial setting screen appears. → P.57
- The Home screen appears. → P.72

■Turning power OFF

1 Press the power key for 1 second or longer ▶ "Power off" ▶ "OK"

Sleep mode

When the power key is pressed or the terminal is not operated for a specified duration of time, the display turns off and the terminal enters sleep mode.
Pressing the power key quits sleep mode.

Screen lock

When you turn power on or quit sleep mode, the touch panel is locked.
Tap to unlock the screen.

Switching the Screen Display Orientation

The terminal can automatically switch the display orientation by sensing the sideway tilt of the body.

- The display may not switch depending on the content being displayed.
- Operate on the terminal, setting the display vertically to the ground. If the display is placed horizontally to the ground, the display orientation does not switch.
- You can disable screen rotation by tapping in the Notifications panel.

Basic Operations

Operate the terminal by directly touching the touch panel (display).

■Precautions on using the touch panel

- The touch panel has been designed for light finger touches. Do not press it hard with your finger or with sharp objects (nail, ballpoint pen, pin etc.).
  The following user actions may cause the touch panel not to work properly. They may also cause malfunction.
  - Touching the screen with gloved hands
  - Touching the screen with the tip of a fingernail
  - Placing a foreign object on the screen
  - Sticking a protective sheet or seal on the screen
  - Touching the screen when it is wet
  - Touching the screen with sweaty or wet fingers
- Set the terminal to sleep mode before carrying it in your pocket or bag. Carrying the terminal while not in sleep mode may cause unintended operation.

Tap

Select or run items.

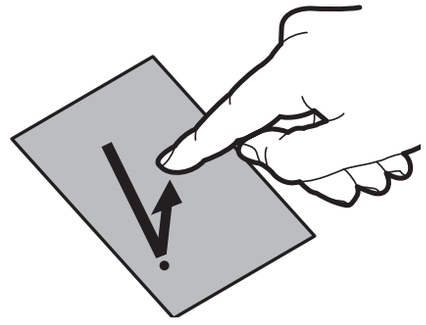

Touch the panel then release your finger.

■Touch and hold

In some screens, continuing to touch the touch panel displays a menu.

Slide

Scroll up/down/left/right in direction you want to view.

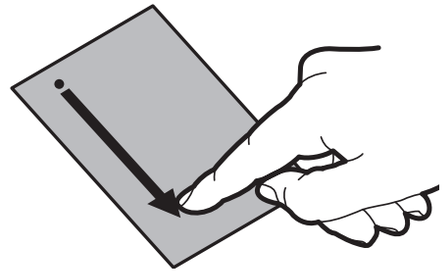

Slide your finger while touching the touch panel.

■Drag

Slide your finger while touching an item (icon, etc.) to move it.

Flick

Quickly scroll in direction you want to view.

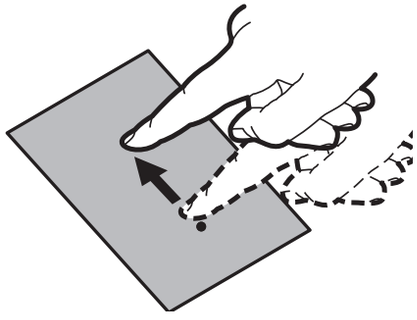

Quickly slide your finger and release it.

Pinch/apart with two fingers

Zoom in or zoom out.

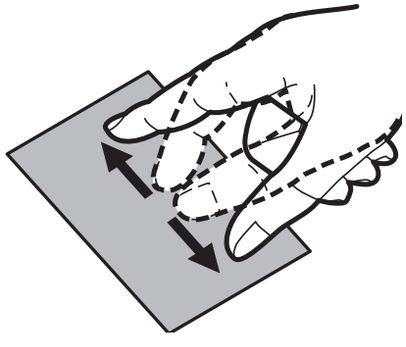

Touch the touch panel with two fingers, then slide them apart or together.

Operating the touch keys

You can use the [≡] [⌂] [⮌] keys mainly for the following.

- [≡] : Display the menu available for the current screen. Depending on the current screen, menu items may include search, settings, or delete options.
- [⌂] : Display the Home screen. You can return to the Home screen when using a function. Touch and hold to carry out task management.
- [⮌] : Go back one screen. Use when you want to return to the previous screen.

Initial Settings

Settings when power is first turned ON

When the terminal power is first turned ON, the following settings are required.

1. **When the initial setting screen appears, tap the language ▶ "次へ" (Next)**
2. **Check the displayed content ▶ "Next"**
3. **To configure a Google account, "Settings"**
   - Follow onscreen instructions to configure a Google account and back up data, and then tap "Next".
4. **To use Google Location Service, mark the checkbox ▶ "Agree" ▶ "Next"**
5. **To use GPS, mark the checkbox ▶ "Agree" ▶ "Next"**
6. **Check the explanation for updating software ▶ "Next"**
7. **When the DOCOMO Services initialization screen appears, "Next"**
8. **Check the displayed content, and tap the "Install" radio button to install all applications ▶ "Next"**
9. **To initialize Osaifu-Keitai, tap the "Set" radio button ▶ "Next"**
   - Follow onscreen instructions to initialize Osaifu-Keitai.
10. **To set a docomo application password, "Set"**
    - Follow onscreen instructions to set a docomo application password.
11. **Check the displayed settings for providing location, and tap a radio button to set an item ▶ "Next"**
12. **"OK"**

Setting an access point

The access points (sp-mode, mopera U) required for connecting to the Internet are preset. You may add or change them as required.

- The sp-mode is set as the default access point.

Configuring access point to be used

1. **From the Home screen, ☰ ▶ "Settings" ▶ "Wireless & networks" ▶ "Mobile networks" ▶ "Access Point Names"**
2. **Tap the radio button for the access point**

Adding an access point

1. **From the Home screen, ☰ ▶ "Settings" ▶ "Wireless & networks" ▶ "Mobile networks" ▶ "Access Point Names"**
2. **☰ ▶ "New APN"**
3. **"Name" ▶ enter the name of the new network profile ▶ "OK"**
4. **"APN" ▶ enter the access point name ▶ "OK"**
5. **Enter any other items requested by your network operator**
6. **☰ ▶ "Save"**

NOTE

- Do not change MCC to anything other than 440, or MNC to anything other than 10. If you do this, registered/added access points will no longer display on the screen. If access points no longer display due to the MCC and MNC settings being changed, you can either restore default settings or manually set the access points again.

Initializing an access point

- When you initialize an access point, it returns to its default settings.

1. **From the Home screen, ☰ ▶ "Settings" ▶ "Wireless & networks" ▶ "Mobile networks" ▶ "Access Point Names"**
2. **☰ ▶ "Reset to default"**

sp-mode

sp-mode is an ISP for NTT DOCOMO smartphones. In addition to Internet connection, this also provides an email service that uses the same email addresses as i-mode (@docomo.ne.jp).

- sp-mode is a paid service that requires subscription. For details about sp-mode, refer to the NTT DOCOMO website.

mopera U

mopera U is an NTT DOCOMO ISP. If you have subscribed to mopera U, you can use the Internet after making the simple settings.

- mopera U is a paid service that requires subscription.

Setting mopera U/sp-mode

1. **From the Home screen, ☰ ▶ "Settings" ▶ "Wireless & networks" ▶ "Mobile networks" ▶ "Access Point Names"**
2. **Tap to select the "mopera U (スマートフォン定額)" (Smartphone flat-rate)/"mopera U設定"(mopera U settings)/"spモード"(sp-mode) radio button**

NOTE

- Subscription to flat-rate packet communication service is required if you want to use "mopera U (スマートフォン定額)" (Smartphone flat-rate). For details on mopera U (Smartphone flat-rate),refer to the NTT DOCOMO website.
- "mopera U設定" (mopera U settings) is the access point for setting mopera U. When you use the access point for setting mopera U, packet communication charges for setting do not apply. Note that you can only connect to the initial setting screen or the setting change screen for mopera U. For details on mopera U settings, refer to the mopera U website.

Wi-Fi settings

Wi-Fi is a function that allows you to use email and the Internet, via access points for household/corporate networks or public wireless LAN services.

■Radio wave interference with Bluetooth devices

Since a Bluetooth device and a wireless LAN (IEEE802.11b/g/n) device use the same frequency ranges (2.4GHz), radio wave interference may occur when the Bluetooth device is used near a device equipped with a wireless LAN. This may cause deterioration in the communication speed, noise and connection problems. If this occurs, take the following measures:

- Keep a distance of at the nearest 10 m from a wireless LAN device when you connect the Bluetooth device or the terminal.
- Turn off the Bluetooth device in case you should use the Bluetooth device within 10 m from the wireless LAN device.

Turning Wi-Fi ON to connect to a network

1 From the Home screen, ☰ ▶ "Settings" ▶ "Wireless & networks" ▶ "Wi-Fi settings"

2 Mark the "Wi-Fi" checkbox

- A scan for Wi-Fi networks begins automatically. A list of available networks appears.

3 Tap the name of the Wi-Fi network that you want to connect to

- To connect to a protected Wi-Fi network, enter the required information and tap "Connect".

Connecting to a Wi-Fi network with easy Wi-Fi settings

- When an access point-capable device supports "Easy Wireless Setup" and "WPS", you can easily complete required settings, including ESSID and the security method.

1 From the Home screen, ☰ ▶ "Settings" ▶ "Wireless & networks" ▶ "Wi-Fi settings"

2 Mark the "Wi-Fi" checkbox

3 "Wi-Fi Easy Settings" ▶ "Easy Wireless Setup"/"WPS"

■Easy Wireless Setup

- Keep touching the easy setup button until the POWER LED blinks in Green on the access point.
- Again, keep touching the easy setup button until the POWER LED is lit Orange on the access point.

- When the status bar shows , you are accessible to the Wi-Fi network.

■WPS

- Push Button Control method: Search for access points begins, so you should press the pushbutton on an access point itself or an access point's setting screen. Continue by following onscreen instructions.
- PIN method: Search for access points begins. Continue by following onscreen instructions. When "PIN code" (Pin code for WPS) appears on the terminal, register the displayed number in the access point.
- When the status bar shows , you are accessible to the Wi-Fi network.
- If the security for a WPS-set access point is WEP, connection is not possible.

Adding a Wi-Fi network manually

● For information on using an access point, refer to the manual for the access point.

1. **From the Home screen, ☰ ▶ "Settings" ▶ "Wireless & networks" ▶ "Wi-Fi settings"**
2. **Mark the "Wi-Fi" checkbox**
3. **"Add Wi-Fi network"**
4. **Enter the network SSID for the Wi-Fi network to be added, and then select the security (Open, WEP, WPA/WPA2 PSK, 802.1x EAP)**
5. **Enter additional security information as required ▶ "Save"**

Disconnecting a connected Wi-Fi network

1. **From the Home screen, ☰ ▶ "Settings" ▶ "Wireless & networks" ▶ "Wi-Fi settings"**
2. **Tap the connected Wi-Fi network ▶ "Forget"**

NOTE

● Packet communication is still available when Wi-Fi is turned on. However, if the terminal is connected to a Wi-Fi network, the Wi-Fi network takes precedence. When the Wi-Fi network is disconnected, the terminal automatically connects to the 3G/GPRS network. If you continue using the terminal connected to the 3G/GPRS network, note that you will incur costly packet communication charges.

● When is displayed on the status bar, Auto-IP connection is intended and does not allow internet connection including application communication.
Check the radio wave condition and password (security key) and reconnect it before connecting to the Internet.

Setting an Email account

Setting an email account provided by mopera U or any general providers, you can use email.

● Obtain information required for completing settings from your service provider beforehand.

1 In the application list screen, "Email"

■To set an additional account

▶ ☰ ▶ "Accounts" ▶ ☰ ▶ "Add account"

2 Enter the email address and password ▶ "Next"

- For an email account with preset provider information, settings for the send/receive mail servers are complete automatically.
- For an email account without preset provider information, settings must be completed manually. Contact your provider for settings information.

3 Enter the account name and user name ▶ "Done"

Setting a Google or other account

By configuring a Google account, you can use Gmail, market, and other services.

1 From the Home screen, ☰ ▶ "Settings" ▶ "Accounts & sync"

2 "Add account" ▶ tap the type of account

3 Follow onscreen instructions to configure the account

Reading the Status Bar

Notification icons for new information and status icons for the terminal status are displayed in the status bar.
Notification icons are displayed on the left side, and the terminal status icons are displayed on the right side of the status bar.

Status bar

Status icons

Icon	Description
	The battery needs to be charged / Battery level / The battery is charging
*	Signal status
*	International roaming
	Out of service area
/ *	3G communicating / available
/ *	GPRS communicating / available
	Airplane mode activated
*	Connected to Wi-Fi
	Connected to Wi-Fi (During Auto-IP)
/	Bluetooth is ON / connected to compatible device
	Synchronizing data
	Osaifu-Keitai lock activated
	miniUIM not inserted
	The alarm is set
	Speaker ON during call
	Microphone is mute
/	Silent mode with vibration ON/OFF
	eco mode is ON (Gray "eco": Original eco mode Aqua "eco": Full eco mode)
	GPS is positioning

Icon	Description
	Enterable text type (hiragana / katakana / alphabet / numerals / smileys, emoticons, symbols, fixed phrases, character codes / T9 input)

* When a Google account is configured (synchronized), the icon appears blue, and when not configured (not synchronized), gray.

Notification icons

Icon	Description
	New Gmail
	New Email
	New sp-mode mail
	New SMS message
	Failed to send SMS
	New Voice Mail message
	New instant message
	New Area Mail
	Upcoming calendar event
	Upcoming Schedule event
	Alarm is snoozed
	Media Player playing
	Unsecured Wi-Fi network found
	Newly received file via Bluetooth communication
	USB is connected
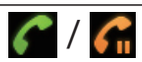 /	In call / On hold
	Missed call
	Data upload/send
	Data download/receive
	Application installation completed
	Update of installed application available
	Some notification icons undisplayed

Icon	Description
	Sending/receiving data by infrared data exchange
	Viewing 1Seg
	MEDIAS NAVI update notification
	Software update notification
	Major software update notification, updating
	PC Link is connected
	PC Link available
	PC Link confirmation message
	Connected by USB PC Link
	Tap searching
	Error/Alert message
	No available space in the main terminal
	Using USB tethering
	Using Wi-Fi tethering
	Using USB and Wi-Fi tethering
/	VPN (PPTP) is connected / Unconnected
	VPN (IPSec/L2TP) is connected

Using the Notifications panel

When a notification icon appears, you can open the Notifications panel to check a message or event notification.

1 Drag the status bar downwards

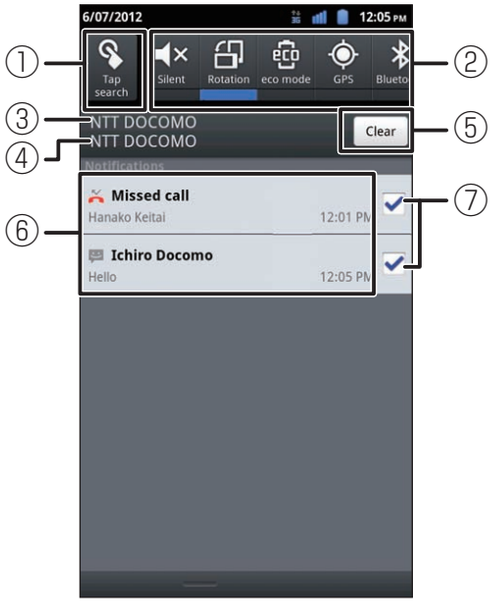

①Activates Tap search. → P.83

②Tap the following icons to change the function status.

Silent / Silent : Silent mode (vibration) on/off → P.108

Rotation : Automatic screen rotation on/off → P.54

eco mode : eco mode on/off → P.109

GPS : GPS function on/off → P.146

Bluetooth : Bluetooth function on/off → P.99

Wi-Fi : Wi-Fi function on/off → P.99

Brightness : Brightness level → P.108

Auto-sync : Account auto-synchronization on/off → P.114

③Shows the name of the network carrier you are connecting to.

④Shows the name of the network carrier that provides services.

⑤Tap this to delete the checkmarked (⑦) notifications and the notification icons displayed on the status bar.

⑥Shows the missed call log and other information such as completion of a download.

⑦Mark a checkbox for the notifications you want to delete, and then tap ⑤; the notification icons are deleted.

■Close the Notifications panel

▶ Drag bottom of Notifications panel to top

Text Entry

The terminal has an onscreen keyboard that is displayed in the screen. Tap a text box on the screen to display the onscreen keyboard.

- You can use the following two kinds of keyboards.

■QWERTY keyboard

This keyboard uses a PC keyboard layout.
Enter Japanese in romaji.

■10-key keyboard

This is an ordinary keyboard of mobile phones.

①		/ : Toggle the QWERTY keyboard and 10-key keyboard. (^_^) #!?" 定型文 文字コード → P.69
	後変換	Change text to hiragana/kana/alphabet/etc.
	カナ英数	With the 10-key keyboard, changes text to kana/alphanumeric/etc. Also toggle half-width/full-width.
②	あA あA1 あア A 1	Toggle the kind of text to enter. Touch and hold to display the ATOK menu. [ATOK Menu] • "ATOK Settings": "Configuring text entry settings" → P.69 • "Register Words": Add words. Added words are usable when converting kana to kanji.
③	␣	Enter a space.
	変換	Convert entered text.
④	記号	Change the keyboard to symbol entry.
⑤	← / →	Move the cursor. When converting, change the conversion range.

⑥		Enter a line feed or confirm entered text.
	次へ	When there is a text entry box such as for Phonebook, completes entry and moves to the next item.
	実行	When entering text for a web page or for search words, runs the function of the text box.
⑦		Delete text to the left of the cursor. For the 10-key keyboard, you can also set "Character delete key" (P.70) to delete text to the right (CLR).
⑧		Tap once to change the next character to be entered to upper case ( ), tap twice to lock in upper case ( ). Some symbols can also be entered.
⑨		Display one character before (reverse).
	戻す	Undo one action before.
⑩	-	Conversion/prediction candidates are displayed when entering text, and you can tap to enter text. • Slide left/right to display other conversion/prediction candidates. • Flick up/down for wider conversion/prediction candidates display.

Selecting the 10-key keyboard entry method

Select a text entry method for the 10-key keyboard.

1 On a text entry screen, touch and hold あA/あA1/あア A 1 ▶ "ATOK Settings" ▶ "Input mode"

2 "Numeric keypad input"/"Gesture input"/"Flick input"/"T9 input"

■Numeric keypad input

Tap the key with the desired character assigned on repeatedly until you get to the character.

■Gesture input

Keep touching on the key with the desired character; the associated gesture guide (characters) is displayed around the key. Slide your finger to the target character without releasing it from the panel.
You can slide the finger you tapped downward once or twice to display a gesture guide with a voiced consonant, unvoiced consonant, or small kana (during alphabet entry, toggle upper/lower case).

Example: To enter "ぱ"

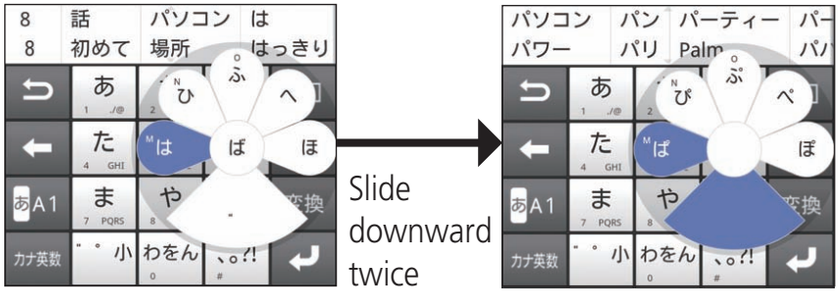

■Flick input

Keep touching on the key with the desired character; the associated flick guide (characters) is displayed on the key. Flick your finger toward the target character without releasing it from the panel.

After flick input, you can tap ゛゜小 once or twice to enter a voiced consonant, unvoiced consonant, or small kana.

■T9 input

Tap each key with a desired character once, and then select the desired text from the displayed prediction candidates to enter it.

Example: To enter "春"

▶ Tap "は" then "ら"

Tap "春" displayed in the prediction candidates.

- If desired text does not appear in the candidates, tap 読み編集 and enter the reading.
- To enter a voiced/unvoiced consonant, tap ゛゜.
- To toggle English and Japanese, tap 英語 / 日本語.
- You can tap 漢字 かな to toggle display of candidates between "漢字／かな" (kanji/kana).

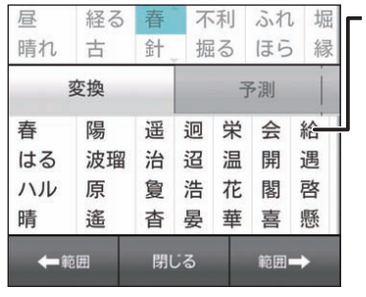

A "はる" candidate appears in "変換" (convert), so tap "春". Prediction candidates from "はる" appear in "予測" (prediction).

- To change the conversion range, tap ←範囲 / 範囲→.

Entering with the smiley/emoticon/symbol palette

1 In a text entry screen, "⌨"

2 "♥"/"(^_^)"/"#!?"

- The palette for the keyboard is displayed.

■Entering from fixed phrases/character codes

▶"定型文"/"文字ｺｰﾄﾞ"

■Quoting Phonebook data

▶"🐻" ▶"電話帳/ATOKダイレクト" ▶ tap the entry ▶ checkmark the item to quote ▶ "OK"

Entering text by handwriting

- Handwritten hiragana, katakana, alphabet, and numbers can be recognized.

1 In a text entry screen, "⌨" ▶ "✍"

2 Write to enter characters

- Tap a tab to select the type of text to enter.

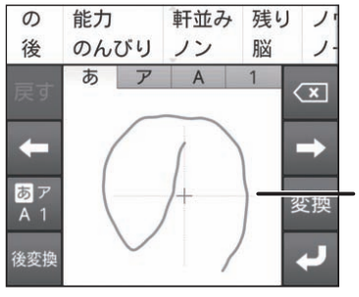

Area for handwriting

Configuring text entry settings

Configure settings for text entry including sound/vibration for key operation and text size.

1 In a text entry screen, touch and hold あA/あA1/あア A 1 ▶ "ATOK Settings"

2 Select any item:

Input mode → P.67

Entering auxiliaries……Set entering auxiliaries.

Keypad sound……Set sound for when keys are pressed.

Keypad vibration……Set vibration for when keys are pressed.

Multi-tap input……Enable numeric keypad input for both gesture input and flick input.
Mark the "Enable auto cursor moving" checkbox to move the cursor to the right after a period of no entry during numeric keypad input. Also set how quickly the cursor moves. Mark the "Enable multi-tap input when gesture / flick input" checkbox to automatically move the cursor during both gesture input and flick input.
The setting for auto cursor moving changes with each "Input mode" setting.

Character delete key·····When deleting text, set to delete to the left of the cursor ("Backspace (⌫)") or the right ("Clear (CLR)").

Number type keypad·····Set whether to use a numeric keypad when using the 10-key keyboard.

Gesture guide·····Set whether the gesture guide is displayed at entry by gesture. Mark the checkbox to display the gesture guide. You can set the time length before the guide is displayed.

Flick guide·····Set whether the flick guide is displayed at entry by flicking.

Flick Sensitivity·····Set the sensitivity of character selection for a character input by flicking.

Modifier key flick·····Set to enable entry of dakuon/han-dakuon by flicking ゛゜小 for flick input.

Auto alphanumeric select·····Set to enter in half-width letters when switching to the QWERTY keyboard from the 10-key keyboard.

Direct alphanumeric input·····Set to enter half-width letters only after they are confirmed in alphabet entry.

Show numeric keys (vertical screen) ·····Set to display numeric keys when displaying the QWERTY keyboard in the vertical screen. When set not to display, enter numbers by flicking.

Show numeric keys (horizontal screen)·····Set to display numeric keys when displaying the QWERTY keyboard in the horizontal screen. When set not to display, enter numbers by flicking.

Use half-width space·····Set to enter half-width spaces also when entering Japanese text.

Auto space insert·····Set to automatically put a space following a word after it is confirmed in alphabet entry.

Delete key flick·····Set whether to delete a string of text by flicking ⌫ / CLR upward or to the left.

Auto full screen (horizontal) ·····Set whether to display the text entry field automatically at full screen when in the horizontal screen.

Converting / Candidates·····Set character conversion and prediction candidates.

Input prediction·····Set to display the prediction candidates for conversion.

Showing prediction candidates before next input·····Set to predict and display candidates for words to follow confirmed (converted) text. Selectable when the "Input prediction" checkbox is marked.

Initializing learning data·····Reset learning data and smiley/emoticon/symbol entry panel log.

User's dic / Common phrases……Set a user dictionary and common phrases.

Dictionary utility……Maintains the user dictionary.

Common phrase utility……Maintains user-registered fixed phrases. Common phrases that use smileys are not displayed in text boxes that do not support smileys.

Display……Set the character input screen display.

Theme……Set the design for the keyboard.

Key size……Set the size of the keyboard.

Font size……Set the font size for conversion/prediction candidates.

Number of lines to display (vertical screen) ……Set the number of lines of conversion/prediction candidates to display in vertical screen.

Number of lines to display (horizontal screen) ……Set the number of lines of conversion/prediction candidates to display in horizontal screen.

Initializing settings → P.71

JapaneseInputMethod ATOK ……Displays version information for ATOK.

Initializing text entry settings

You can restore the "ATOK Settings" to their defaults.

1 In a text entry screen, touch and hold あA/あA1/あア A 1 ▶ "ATOK Settings" ▶ "Initializing settings" ▶ "OK"

NOTE

- Learning data, user-registered words, and user-registered fixed phrases are not initialized.

docomo Palette UI

Home Screen

The Home screen is the starting screen for using applications. You can tap ⌂ to open the screen.

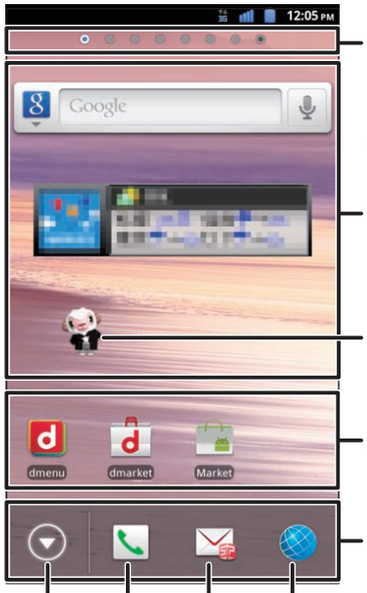

Indicator
Number of Home screen pages and position

Widgets

Machi-chara

Application shortcuts

Dock
Launch browser
Launch sp-mode mail
Launch phone/call log, Phonebook
Open the application list screen

You can move the Home screen to a page on the right or left by sliding the screen.
"ひつじのしつじくん® (Butler Sheep)"
©NTT DOCOMO

Managing the Home screen

"docomo Palette UI" is set to the Home screen by default. In the Home screen, you can add application shortcuts, create folders, etc.

Adding an application shortcut to the Home screen

1 Touch and hold the Home screen

2 "Shortcut" ▶ "Application"

■Adding a widget
▶"Widget"

■Adding an application group (P.75)
▶ "Group" ▶ tap the group to add

3 Tap the shortcut that you want to add

- An application shortcut is added to the Home screen.

Moving a shortcut

1 From the Home screen, touch and hold the shortcut that you want to move

2 Drag it to the desired position and release your finger

- To move a shortcut to another page, drag the shortcut to the right or left edge of the screen, and the Home screen moves to the right or left page.

Docking a shortcut

1 From the Home screen, touch and hold the shortcut to add

2 Drag it to the desired position in the Dock and release your finger

- The shortcut changes places with the icon where it is dragged to.

NOTE

- cannot change places.

Deleting a shortcut

1 Touch and hold the shortcut to delete

2 Drag it to the trash icon at the bottom of the screen and release your finger

- Alternatively, after touching and holding the shortcut, tap "Delete".

Creating a folder on the Home screen

1 Touch and hold the Home screen

2 "Folder"

3 Tap the type of folder that you want to create

Adding a shortcut to a folder

- Shortcuts can only be added to the folder type "New Folder".

1 Touch and hold the shortcut you want to add to a folder

2 Drag the shortcut to the desired folder and release your finger

- You can tap a folder to open it and access shortcuts.

Renaming a folder

1 Tap the folder that you want to rename

2 Touch and hold the title bar

- Alternatively, after touching and holding the folder, tap "Edit name".

3 Enter a title ▶ "OK"

Switching the Home screen

1 From the application list screen, "Home Switcher"

2 "Clear default" ▶ "Clear defaults" ▶ ⌂ ▶ checkmark "Use by default for this action." ▶ tap the Home application you want to switch to

Using Kisekae Themes

1 From the Home screen, ☰ ▶ "Kisekae/Wallp"

2 "Kisekae" ▶ slide and select a Kisekae you want to set ▶ "Set"

■Changing wallpaper

▶ "Wallpaper" ▶ "Gallery" / "Live wallpapers" / "Wallpaper gallery" / "Wallpapers" ▶ tap the image you want to set ▶ "Set wallpaper"

- If you have selected "Gallery", select the image to set as wallpaper, and then drag the trimming frame to where wallpaper will be used.
  Tap "Save" to set the wallpaper.
- If you have selected "Live wallpapers", tap "Settings..." depending on the wallpaper to set the wallpaper.

Adding a Home screen

1 From the Home screen, ☰ ▶ "Home screens"

- Thumbnails of Home screens appear.

2 "+"

- You can add up to 12 Home screens.

■To delete Home screens

▶ Touch and hold the thumbnail of the Home screen to delete ▶ drag it to the trash icon at the bottom of the screen and release your finger

■Repositioning Home screens

▶Touch and hold the thumbnail of the Home screen to reposition ▶ drag it to where you want to move it and release your finger

Application List Screen

The application list screen shows a list of applications installed in the terminal in groups.

1 From the Home screen,"▼"

Group name/number of applications

Tap the group to show/hide application icons.

Applications

■Change to list format

▶ ☰ ▶ "List format"

- In list format, ☰ ▶ "Tile format" to change to tile format.

Editing a group

Changing a group name

1 From the application list screen, touch and hold the group you want to change

2 "Edit name" ▶ enter the group name ▶ "OK"

■Changing a label

▶ "Edit label" ▶ tap the color

■Deleting a group

▶ "Delete" ▶ "OK"

Adding a group

1 From the application list screen, ☰

2 "Add group"

3 Enter a group name ▶ "OK"

Repositioning groups

1 From the application list screen, touch and hold the group to reposition

2 Drag it to where you want to move it and release your finger

Adding a group shortcut to the Home screen

1 From the application list screen, touch and hold the group to add ▶ "Add"

NOTE

- "Recently" automatically displays the preceding eight applications used.
- Group names cannot be changed or deleted with "Recently", "DOCOMO Services", or "Download Application".

Editing applications

Repositioning the applications

1 Touch and hold the application you want to reposition on the application list screen

2 Drag it to where you want to move it and release your finger

Uninstalling an application

1 Touch and hold the application you want to uninstall on the application list screen ▶ "Uninstall" ▶ "OK" ▶ "OK"

Adding an application shortcut to the Home screen

1 Touch and hold the application you want to add on the application list screen ▶ "Add"

Applications list

Applications		Description
	Anshin Scan	Protects the terminal from viruses. Detects viruses hiding in installed applications or on the microSD card.
	Area Mail	Allows you to receive and check early warning Area Mail. → P.124
	遠隔サポート（Remote support）	This is an application that realizes the service "Smartphone remote support" supported by an operator of the call center by checking the status of the terminal in remote operation. → P.175
	AUTO-GPS	Use GPS-paired notification services for weather reports, shops and other vicinity information, tourist information, etc. geared to your location.

Applications		Description
	Osaifu-Keitai	→ P.153
	Music	Use Music Player to play music saved to the microSD card.
	Voice Search	Your spoken words are recognized, then searched in the Browser by Google search.
	Camera	→ P.138
	Calendar	→ P.157
	Gallery	→ P.141
	Google Search	→ P.82
	声の宅配便 (Koe-no-Takuhaibin)	Allows you to use Koe-no-Takuhaibin as a convenient and easy function on a smartphone. Easily record and play back voice messages. → P.92
	災害用キット (Saigai-yo Kit)	Post and check messages to a disaster emergency board.
	Schedule	Create and manage schedule events. → P.158
	Infrared	Send/receive Phonebook data by infrared. → P.130
	Settings	→ P.99

Applications		Description
	地図アプリ ("Chizu Appli" map application)	Supports your outings using functions such as maps/shop & facility search/navigation/ train connections/visited places/etc.
	Twipple	You can easily use Twitter through Twipple.
	TV	→ P.149
	Calculator	→ P.159
	Phone	→ P.84
	Phonebook	→ P.88
	PhoneBookCopy	Transfer or copy Phonebook data using external media such as a microSD card. → P.90
	Talk	→ P.125
	Clock	→ P.156
	docomo location information	Provides location information by imadoco search, imadoco kantan search, Keitai-Osagashi Service, and emergency/ location notification. You can change settings and access the settings site and service site.

Applications		Description
	docomo backup	Back up or restore Phonebook and other data.
	Instruction Manual	The manual for the terminal. You can also launch functions directly from the explanations.
	ToruCa	You can obtain, view, search, update, etc. ToruCa. → P.155
	Navigation	→ P.148
	Videos	This application allows you to rent movies from the Android Market. You can view rented movies and videos in a terminal.
	Browser	→ P.126
	Places	→ P.149
	Home Switcher	Switch the Home application. → P.74
	Market	→ P.144
	Machi-chara	Displays a pet character on the screen. The character appears in the widgets screen and informs you of new mail, calls, etc.
	Maps	→ P.147

Applications		Description
	Email	→ P.120
	Name card creator	Create an original name card displayed in the My profile tab in the Phonebook application.
	Messaging	→ P.118
	Messenger	You can exchange messages quickly with everyone in the circle.
	Media Player	Play music or movies. → P.142
	Memo	Create/manage memos. → P.159
	Mobage	This is an application allowing you to enjoy contents provided by the Mobage.
	BEAUTY	This is an application allowing you to enjoy makeup and fashion.
	BeeTV	BeeTV is a broadcast station dedicated to mobile phones. You can watch programs such as original dramas, music programs and variety programs.
	Book Store MyShelf	View e-books purchased from the BOOK store through "dmarket".

Applications		Description
	Days	Automatically create a viewable journal from mail/ call logs and SNS postings.
	DiXiM Player	→ P.134
	dmarket	Application for launching dmarket. From dmarket, you can purchase such contents as music, videos, and books. Applications available through Android Market are also introduced.
	dmenu	A shortcut to "dmenu", where you can easily search for contents you used with i-mode and enjoyable and useful contents unique to smartphones.
	Gmail	→ P.121
	Google+™	This is a social application to share information with only users who have enrolled themselves in the circle.

Applications		Description
	G-SHOCK App	Connect a BLE (Bluetooth Low Energy)-capable G-SHOCK and the terminal via Bluetooth to notify the G-SHOCK with the terminal information (new calls, mail, etc.), or sync the G-SHOCK's time with the terminal's. Set information that can be notified. → P.104
	Gガイド番組表 (G-GUIDE EPG)	With this application you can view program guides for terrestrial digital, BS digital, and other broadcast services. You can search programs by keyword, genre, etc., book viewing of 1Seg programs, and use remote recording from a place of outing. → P.152
	iD 設定アプリ (Application for iD settings)	Setting application to enable you to use iD electronic money. → P.160
	i チャネル (i-Channel)	Access i-Channel.
	Latitude	→ P.149
	MEDIAS NAVI	Connect to the manufacturer's site "MEDIAS NAVI".

Applications		Description
	Quickoffice	→ P.159
	spモードメール (sp-mode mail)	You can use a DOCOMO email address (@docomo.ne.jp) to send and receive email. Use smileys and Deco-mail, and autoreceive mail. → P.118
	Topics	Automatically gather everything from Twipple trends to the most talked-about topics, as well as you and your friends' hot topics from SNS services, for easy browsing.
	WELLNESS	Navigate get-in-shape and health maintenance programs. Choose training and recording that suits your likes, and keep up an enjoyable health regimen.
	YouTube™	You can watch/upload YouTube videos.

Widgets list

You can add widgets to the Home screen to use the following functions.

Widget		Description
	Setting manager	Change settings you have made all together with one touch.
	Setting manager (Going out)	Change settings you have made (for going out) all together with one touch.
	Setting manager (Home)	Change settings you have made (for home) all together with one touch.
	Setting manager (Sleep)	Change settings you have made (for sleep) all together with one touch.
	Music (small)	Display a simple music control panel.
	Music (large)	Display a music control panel that includes album cover images.
	Calendar (upcoming events)	Display upcoming events scheduled in the calendar.
	Calendar (small)	Add a small-size calendar.
	Calendar (large)	Add a large-size calendar.
	Google Search	Add a search box. → P.82

Widget		Description
	Picture frame	Add an image.
	Traffic	Display traffic conditions as far as your destination.
	Schedule & Memo	Display the calendar and check schedule and memos.
	Soradas (small)	Displays the day's weather forecast.
	Soradas (large)	Displays a four-day weather forecast.
	Phonebook Select members	Displays a history (call logs, sp-mode mails, and SMS) of contacts saved to Phonebook.
	Clock (world)	Display the local time and the time for a specified city.
	Clock (analog)	Add an analog clock.
	Clock (digital)	Add a digital clock.
	docomo location information	Displays settings/log for providing of location information.
	ドコモ地図ナビウィジェット (docomo Chizu Navi widget)	Displays a map and vicinity information for your current location.
	Personal area	Displays information for My Profile, My Menu, etc.

Widget		Description
	Pedometer	Use the pedometer.
	Market	Display information for Android Market.
	Machi-chara	Displays a pet character on the screen. The character appears in the widgets screen and informs you of new mail, calls, etc.
	BEAUTY	Launches the MEDIAS BEAUTY application.
	Contents Headline	Displays docomo store contents.
	Days	Display information for Days.
	Flashlight	Turns on the terminal's light.
	Google+	You can display the information of Google+.
	i チャネルウィジェット (i-Channel widget)	A widget that obtains and displays information for i-Channel.
	Latitude	Display information for Latitude.
	Topics	Display information for Topics.
	YouTube	Search and view YouTube.

NOTE

- Separate subscription (paid) is required for use of some applications/widgets.
- Application/widget content and icon positions may change by performing either a software or major update.

Using the Search Function

You can search Phonebook or applications in the terminal, or search web pages.

● For information on search settings → P.115

1 From the application list screen, "Google Search"

2 "g" ▶ tap the search target icon

- The search target icon can be specified by pressing "⚙".

3 Enter the search text ▶ "実行" (Execute)

- Search results are displayed.
- After entering search text, search candidates are displayed. You can select a candidate to search with.
- Tap an application from a candidate to launch the application.

■Searching by voice

▶ "🎤" ▶ say the search words clearly into the microphone

- Not usable with some search items.

Using Tap search

Make a search by tapping words that appear on the screen you want to search.

1 Open the Notifications panel, "Tap search"

2 Tap the text you want to search by on the screen

- Recognized text is highlighted. Drag ◢/◣ to adjust the search text characters.
- Touch and hold to zoom in.

3 "🔍" ▶ "実行" (Execute)

- You can tap the text box and edit the text before searching.

NOTE

- Tap search has the following requirements for recognizing text.
  - Recognizable text: kanji/hiragana/alphabet/katakana/numbers/symbols (black text on white background recommended)
  - Recommended size: 20 to 40 dots
- Some applications may be not displayed correctly in Tap search mode.

Task Manager

The Task manager shows the running applications and allows you to switch to the one you want to use. It also allows you to quit applications you do not use.

1 Touch and hold ⌂

- Running applications are displayed.

■To close an application

▶ "✕"

■To close all applications

▶ "Close all" ▶ "Yes"

2 Tap the application that you want to display

NOTE

- Running more than one application may consume more energy and make the operation of the terminal unstable. Doing so may cause applications to be terminated forcibly or slow down.

Checking the Home application

1 From the Home screen, ☰ ▶ "More"

■Checking version information

▶ "Application info"

■Checking Home application settings

▶ "Home settings"

Making/Receiving Calls

Making a call

1 From the application list screen, "Phone"

2 "Dial"

- Tap "Favorites" to display only entries saved to Phonebook. → P.88

3 Enter the phone number

- If you enter a wrong number, tap ⌫ to delete the number.
- Enter "186"/"184" before entering the number to notify/not notify your number, for that call only.

■If you do not wish to notify your number

▶ ☰ ▶ "Caller ID notification" ▶ "Not notify"

■Using Koe-no-Takuhaibin (P.92)

▶ "Koe-no-Takuhaibin"

4 "📞"

5 When the call is finished, "📵"

NOTE

- Touch and hold "✻" to enter a push signal (pause).

■Emergency call

Emergency call	Phone number
Police emergency	110
Fire brigade/Ambulance emergency	119
Maritime distress call	118

- The terminal supports "Emergency Location Report".
  Calls made to emergency service organizations (e.g. by dialing 110, 119 or 118) disclose information on the caller's location to the organization receiving the call.
  The location information and phone number are not disclosed when, before each individual call made, "184" or another blocking prefix is dialed first. If the information is deemed necessary for the protection of life, etc., this information may be acquired by the organization being called.
  Locations/timing planned for adoption of this feature vary according to the status of the preparations by the relevant emergency service organizations.

- When calling 110, 119 or 118 from the terminal, first say you are calling from a mobile phone, give your number, and state your location clearly, because the police or fire department may call you back for confirmation.
  Also, do not move around when making the call. Do not turn off the power immediately after ending the call, but leave it turned on for ten minutes or so, so that you can receive a call.
- Depending on the area you are calling from, you may not be connected with the nearest police or fire department, etc.

NOTE

- When you have set PIN1 code entry and Airplane mode, you need to enter the PIN1 code to make an emergency call.
- When you have locked the screen, you can make an emergency call without drawing screen unlock pattern and entering the lock number for each screen. On each screen, tap "Emergency call". The "Emergency Dialer" screen appears; you can make phone calls only to the emergency phone numbers.
- In Japan, the 110, 119, and 118 emergency numbers cannot be dialed from the terminal when the miniUIM is not set to it.
- In Japan, the 110, 119, and 118 emergency numbers cannot be dialed by tapping "Emergency call" from the PIN code entry screen on startup. For details on PIN code, see "Security codes used with the terminal" (P.111).

Making an international call (WORLD CALL)

WORLD CALL is an international phone service that can be used from DOCOMO mobile phones. Customers who have subscribed to the FOMA service would also have automatically subscribed to "WORLD CALL" at the same time (excepting those who have declined it).

- For details on WORLD CALL, refer to DOCOMO "International Services website".
- Using international dial assist → P.164

1 From the application list screen, "Phone"

2 "Dial"

3 Touch and hold "0"

- A plus sign "+" appears.

4 Enter the country code ▶ area code (city code) ▶ recipient's mobile phone number ▶ "" "

NOTE

- If the area code begins with "0", omit "0". However, "0" may be required for calling some countries or areas, such as Italy.

Receiving a call

1 When a call is received, "Activate" ▶ "Accept"

■Declining a call

▶ "Activate" ▶ "Reject"

■Putting an incoming call on hold

▶ [≡] ▶ "On hold"

- The call is connected and immediately placed on hold.

2 When the call is finished, " "

NOTE

- A call fee is incurred even for an incoming call placed immediately on hold.
- If you decline an incoming call when Voice Mail service or Call Forwarding service are set to Activate, the call is forwarded to the Voice Mail service center or the designated forwarding number.

In-call operations

①Place on hold/take off hold.
②Place on hold and make other call. → P.96
③Display dial pad.
④Use Bluetooth function. Toggle on/off with each tap. Available when connected to Bluetooth device compatible with a headset or handsfree.
⑤Mute yourself to the other party. Toggle on/off with each tap.
⑥Hear the other party through the speaker. Toggle on/off with each tap.

■Adjusting the volume

▶Press the volume key

Call Log

You can check the outgoing/incoming calls history.

1 From the application list screen, "Phone"

2 "Incoming history"/"Outgoing history"

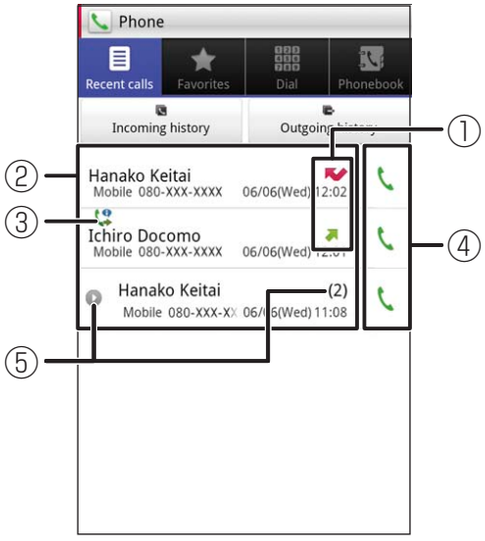

①Log icons are displayed.
- : Outgoing call
- : Incoming call
- : Missed call

②The names of other parties to/from which calls were made are displayed.

③The following icons are displayed.
- : Call and with ID*
- : Call and withhold ID*

*This is displayed when you set a caller ID or put "186" and "184" before a phone number.
- : International call (outgoing)
- : International call (incoming)
- : Koe-no-Takuhaibin transmission

④Make a call.

⑤A series of calls to/from a same party are displayed as one entry with ▶. The number in parentheses is the number of logged calls.

■Adding a phone number from the call log to Phonebook

▶ Touch and hold the log entry you want to add ▶ "Add to phonebook" ▶ "Register new" ▶ enter required items ▶ "Save"

- If multiple accounts are registered, select one from the accounts.
- If you want to select a phonebook already registered, just select the phonebook.

■Deleting the log

▶ [≡] ▶ "Delete all" ▶ "OK"

- To delete individual entries, touch and hold an entry to delete and then tap "Remove from call log".

Phonebook

You can save phone numbers, email addresses, etc.

1 From the application list screen, "Phonebook"

①Displays log of your call logs, SMS, sp-mode mails.
②Displays the "Phonebook list screen".
③Your profile (MyProfile) is displayed. You can create your name card (P.89) by tapping "Create new".
④Displays Phonebook details (profile). →P.89
- Tap the image and then the icon that is displayed, to make a call or create mail.

⑤Displays Japanese syllabary, and allows jump to selected syllable.
⑥Displays Phonebook by groups.
⑦Makes new Phonebook addition.
- Enter required items such as name, number, and email address, and then tap "Save".
- When several accounts are registered, select the account to add to.

⑧Enter keywords to search Phonebook.
- Tap to narrow down the groups.

■Deleting entries

▶ ☰ ▶ "Delete" ▶ checkmark entries you want to delete ▶ "Delete" ▶ "OK"

■Importing from/exporting to a microSD card and importing from the miniUIM

▶ ☰ ▶ "Others" ▶ "Import/Export" ▶ Select any item:

Import from SIM card……Load entries from the miniUIM to the terminal.

Import from SD card……Load entries from a microSD card to the terminal.

Export to SD card……Save entries from the terminal to a microSD card.

Share phonebook data……Send all viewable phonebook via Bluetooth transmission, email, etc.

Displaying the profile screen

1 Tap the name of the person you want to display in the Phonebook list screen

- Tap "My profile" to display your profile.

Profile Screen

①Image and name are displayed.
- Select an image and tap the displayed icon to make a call or create email.

②Edit a profile.
③Display the profile screen.
④Displays log of your call logs, SMS, sp-mode mails.
⑤Display groups.
⑥Add to Favorites. → P.84
⑦Display profile.
- Displayed items depend on added content.
- Depending on added content, you can tap the icon to make a call, send email/SMS, launch Google Maps™, etc.

NOTE

- If the same entry (same name, reading, etc.) is registered several times, you can collect (join) the several instances of entry information together into one (displayed beside name).
  In the Profile screen, ≡ ▶ "Join/Separate" ▶ tap the entries to join
  Use the following procedure to cancel joining.
  In the Profile screen, ≡ ▶ "Join/Separate" ▶ "Separate"

Using name cards

Create name cards with "Name card creator" that you can exchange with others via a network. Name cards can be viewed in the My profile screen.

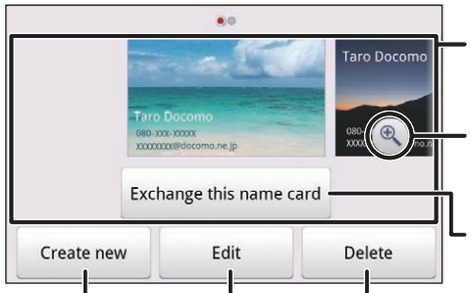

Launch "Name card creator" to edit an existing card or create a new one.

PhoneBookCopy

You can use a microSD card to copy contacts data between your and another terminal. You can also copy Phonebook data registered in a Google account to a docomo account.

1 From the application list screen, "PhoneBookCopy"

- When you first use PhoneBookCopy, you need to accept a "License agreement".

■Exporting Phonebook data stored at docomo account to a microSD card

▶ "エクスポート" (Export) ▶ "開始" (Start) ▶ "OK"

■Importing Phonebook data from a microSD card to your docomo account

▶ "インポート" (Import) ▶ tap the entries to import ▶ "上書き"/"追加" (Overwrite/add) ▶ "OK"

■Copying Google account entries to your docomo account

▶ "docomoアカウントへコピー" (Copy to docomo account) ▶ tap the Google account to copy ▶ "上書き"/"追加" (Overwrite/add) ▶ "OK"

NOTE

- If the designation of a contacts item (phone number, etc.) on another terminal differs with that on the terminal, the designation may be changed or deleted.
  The number of characters registerable to an entry varies with each terminal. Some characters may be deleted during copying to another terminal.
- If exporting contacts to microSD card, you cannot copy data that does not have a name registered.
- If importing contacts from microSD card, files created with "Bulk backup" cannot be read.
- A phonebook created (exported) with the phonebook copy tool may not be correctly displayed with other tools.

Available Network Services

You can use the following DOCOMO network services on the terminal.

Service name	Application	Monthly charge
Koe-no-Takuhaibin	Not required	Free
Voice Mail service	Required	Paid
Call forwarding service	Required	Free
Call Waiting service	Required	Paid
Caller ID notification service	Not required	Free
Nuisance call blocking service	Not required	Free

Service name	Application	Monthly charge
Caller ID notification service	Not required	Free
Call notification	Not required	Free
English guidance	Not required	Free
Public mode (power off)	Not required	Free

- You cannot use the network services when you are outside of the service area or in a location with no radio reception.
- "Deactivate Service" does not result in a cancelation of subscription to Voice Mail service, Call Forwarding service, or any other service.
- For subscriptions and inquiries, contact "General Inquiries" provided on the last page of this manual.
- In this manual, the outlines of each network service are described with menu operations of the terminal. For details, see "Mobile Phone User's Guide [Network Services]".

Using network services

1 From the Home screen, ☰ ▶ "Settings" ▶ "Call settings" ▶ "Network service"

2 Select any item:

Koe-no-Takuhaibin → P.92

Voice mail service → P.93

Call forwarding service → P.95

Call waiting → P.96

Caller ID notification → P.97

Nuisance call blocking service → P.97

Caller ID notification service……Answer a caller who withholds their number with a message to inform them that their number is required. After the message is played, the call is ended automatically.

Second call settings……Informs you during a call that there is another call. This function is not required if you are using Call Waiting.

Call notification……Informs you by SMS that there was a call while power was turned off, you were out of service range, or during a call.

English guidance……Set language to English for guidance when configuring network services (Voice Mail service, etc.) and audio guidance when out of service range.

Remote operation settings……Enable Voice Mail service and Call Forwarding service to be operable from a general push-button land-line phone, pay phone, Docomo mobile phone, etc.

Public mode (power OFF) settings → P.98

Koe-no-Takuhaibin

This service allows you to record a message over the phone and send it to another party.

- You can record up to 500 messages, each up to 15 minutes, and save them for up to 720 hours. You can also protect up to 5 important messages (after protection is canceled, they are erased automatically after the 720 hours).
- For details on Koe-no-Takuhaibin, refer to the NTT DOCOMO website.

■Basic flow of Koe-no-Takuhaibin service

Use Koe-no-Takuhaibin to designate a recipient, send

⬇

Follow audio guidance to record a message

⬇

Recorded SMS notification informs recipient of message

⬇

Recipient accesses and plays message from the notification

⬇

SMS notification arrives to inform you the message was played

Recording the message

You can record a message by sending it to recipient via "Koe-no-Takuhaibin".

1 From the application list screen, "Phone"

2 "Dial" ▶ Enter the phone number ▶ "Koe-no-Takuhaibin"

- Follow audio guidance for the operation.

Playing back message

Play back messages recorded by "Koe-no-Takuhaibin". Follow the audio guidance to delete or protect the message after playback.

1 Send a message to the number indicated in the recorded notification message (SMS)

- Follow audio guidance for the operation.

Using Koe-no-Takuhaibin

1 From the Home screen, ☰ ▶ "Settings" ▶ "Call settings" ▶ "Network service" ▶ "Koe-no-Takuhaibin"

2 Select any item:

Service usage (launch application)
……Launches the Koe-no-Takuhaibin application.

Confirm/Change settings (site connection) ……Connects to Koe-no-Takuhaibin site.

Confirm/Change settings (voice call) …… Confirm/Change settings by telephone.

NOTE

- Charges are incurred for recording and playing back messages.
- Koe-no-Takuhaibin is not available overseas.

Voice Mail service

If you are in a location with no radio reception, the terminal is powered off, or you are unable to take the phone call, the Voice Mail service answers a call with a Voice Mail greeting and records the caller's message.

- Up to 20 messages of approx. 3 minutes can be recorded, and are storable for up to 72 hours.
- Calls you are unable to answer after starting the Voice Mail service are recorded as "Missed call" to "Call log", and appears in the status bar.
- (indicating the number of messages) appears in the status bar when a message is recorded.
- The terminal does not support video voicemail for video phone calls. Make a call to "1412" and disable the video phone support setting.

■Basic flow of Voice Mail service

Activate the Voice Mail service

⬇

The terminal receives a call

⬇

The call is connected to the Voice Mail service center if not answered

⬇

The caller records a message

If you are in a hurry and wish to record a message immediately without listening to the answering message, enter "#" to interrupt the answering message and switch to recording mode.

⬇

You are notified that there is a message at the Voice Mail service center

⬇

Play back the message

Using the Voice Mail service

1 From the Home screen, ☰ ▶ "Settings" ▶ "Call settings" ▶ "Network service" ▶ "Voice mail service"

2 Select any item:

Activate service……Makes the Voice Mail service activated. You can also set the ring time.

Ring time settings……Set time to wait before connecting to the Voice Mail service. If the ring time is set to 0 seconds, calls are not recorded to the call log, and are instead connected to the Voice Mail service center directly.

Deactivate service……Makes the Voice Mail service deactivated.

Settings confirmation……Check current settings.

Play messages……Connects to Voice Mail service center. Follow the audio guidance to play back recorded messages.

Settings……Connects to Voice Mail service center. Follow the audio guidance to change the Voice Mail service settings.

Checking messages……Check whether there are new Voice Mail messages.

Message notification settings……Set whether to notify when there is a new message.

NOTE

- After operating "Settings" or "Checking messages" or a Voice Mail message is recorded, an SMS message "NTT DOCOMO:VM:XX" is received.

Call Forwarding service

The Call Forwarding service forwards a call to a preset forwarding number if you do not answer the call within the preset ring time, or if the terminal is outside of the service area or is powered off.

- If you do not answer an incoming call after the Call Forwarding service is set to "Active", the call is stored as a missed call in the log, and appears in the status bar.

■Basic flow of Call Forwarding

Register the forwarding number

⬇

Activate the Call Forwarding service

⬇

The terminal receives a call

⬇

The call is automatically forwarded to the specified forwarding number

■Call Forwarding service fees

Caller ➡ Call Forwarding service subscriber ➡ Forwarding destination

Charged to caller.

Charged to Call Forwarding service subscriber.

Using the Call Forwarding service

1 From the Home screen, ☰ ▶ "Settings" ▶ "Call settings" ▶ "Network service" ▶ "Call forwarding service"

2 Select any item:

Activate service……Set the number of the forwarding destination and the ring time and then start the service.
If the ring time is set to 0 seconds, calls are not recorded to the call log, and are instead forwarded directly.

Deactivate service……Makes the Call Forwarding service deactivated.

Change call forwarding number……Change the number of the forwarding destination.

Call forwarding settings*……Set whether to connect the caller to the Voice Mail service center when the forwarding destination is busy.

Guidance settings……Set whether a message is played to inform a caller when their call is being forwarded.

Settings confirmation……Check current settings.

* A subscription to the Voice Mail service is required.

Call Waiting service

When there is a second incoming call while you are in call, this service notifies you with a ringtone so you can place the first call on hold to answer. You can also put your current call on hold and place a call to another party.

Setting the Call Waiting service

1 From the Home screen, ☰ ▶ "Settings" ▶ "Call settings" ▶ "Network service" ▶ "Call waiting"

2 Select any item:

Activate service……Makes the Call Waiting service activated.

Deactivate service……Makes the Call Waiting service deactivated.

Setting confirmation……Check current settings.

NOTE

● Even when on hold, a caller is charged a call fee.

Putting a call on hold and answering an incoming call

1 If you hear a beep during a call, "Activate" ▶ "Accept"

- Put the first call on hold and answer the incoming call.

■Declining an incoming call

▶ "Activate" ▶ "Reject"

2 When the call is finished, " ☎ "

- Calling with the second caller ends, and switches to the first caller.

■Placing a call on hold to switch calling

▶ " ⇄ "

- Tap " ⇄ " to toggle calls with other parties.

Putting a call on hold and making a call to another party

1 During a call, " ⊕ "

2 Enter the other party's phone number ▶ " 📞 "

- Put the first caller on hold, and calling switches to the second caller.

3 When the call is finished, " ☎ "

- Calling with the new second caller ends, and switches to the first caller.

Caller ID notification service

When making a call, you can display your phone number on the other party's phone.

- Your phone number is important information. Use caution when notifying your number.

1 From the Home screen, ☰ ▶ "Settings" ▶ "Call settings" ▶ "Network service" ▶ "Caller ID notification"

2 Select any item:

Settings……Set whether to notify your number.

Settings confirmation……Check current settings.

NOTE

- This function is only active when the other party's phone can display the caller ID.
- If you hear an announcement requesting caller ID, activate Caller ID notification or add the "186" prefix to the phone number and call again.

Nuisance call blocking service

Allows you to register prank call numbers and other nuisance calls to prevent them from arriving. By registering callers to reject, any further calls are met with a voice message and rejected automatically.

- When there is a call from a number registered as a caller to reject, the ringtone does not sound. The call is also not recorded to the call log.

1 From the Home screen, ☰ ▶ "Settings" ▶ "Call settings" ▶ "Network service" ▶ "Nuisance call blocking service"

2 Select any item:

Caller ID reject registration……Register the number of the last call answered as a caller to reject.

Specified caller ID reject registration……Directly enter a number or select one from Phonebook/call log to register it as a caller to reject.

Delete all registered caller ID……Delete all numbers registered as callers to reject.

Delete latest registered number……Delete the number last registered as a caller to reject.

Check the number of registration……Check how many numbers are registered as callers to reject.

Advanced settings……Connect to the settings site for the Nuisance call blocking service, and check/delete registered numbers.

Public mode (power off)

Public mode (power off) is an automatic response service dedicated to etiquette required in highly public locations. When Public mode is enabled and the terminal is powered off, a message is played to callers, telling that you cannot answer the call because you are in a situation where you have to power off the phone (e.g., you are in a hospital or airplane, or close to a priority seat in a train), and the call is automatically terminated.

- A Public mode (power off) message is played when outside service range or in a place with poor signal reception.
- The Voice mail service* and Call forwarding service* take precedence over Public mode (power off).

* When the ring time is not set to 0 second, the services operate after the Public mode (power off) message to incoming calls.

1 From the Home screen, ☰ ▶ "Settings" ▶ "Call settings" ▶ "Network service" ▶ "Public mode (power OFF) settings"

2 Select any item:

Activate service……Enter Public mode (power off).

Deactivate service……Quit Public mode (power off).

Settings confirmation……Check the current settings.

Wireless & Networks

Configure settings for Airplane mode, Wi-Fi, Bluetooth function, etc.

1 **From the Home screen, ☰ ▶ "Settings" ▶ "Wireless & networks"**

2 **Select any item:**

Airplane mode → P.100

Wi-Fi……Turns on/off Wi-Fi.

Wi-Fi settings → P.60

Bluetooth……Turns on/off Bluetooth. → P.101

Bluetooth settings……Set the name of a Bluetooth terminal, connection and detection.

- **Bluetooth**……Turns on/off Bluetooth.
- **Device name**……When Bluetooth communication is performed, change the name displayed on a partner's device.
- **Discoverable**……Allow the terminal to be detectable by another Bluetooth device.
- **Discoverable timeout**……Set time within which the terminal can be detected from another Bluetooth device.
- **Advanced settings** → P.104
- **Scan for devices**……Search for Bluetooth devices.

Tethering → P.105

VPN settings → P.106

Mobile networks……Set data communication.

- **Data enabled**……Toggle data communications on/off.
- **Data roaming** → P.164
- **Access Point Names** → P.58
- **Network Mode** → P.164
- **Network operators** → P.164

PC Link……Set PC Link on/off. → P.133

PC Link settings……Set PC Link.

- **PC Link**……Set PC Link on/off.
- **USB PC Link**……Set USB PC Link on/off. → P.134
- **Destination URL**……Display connection URL.
- **Change Hostname**……Set the host name used for the connection URL.

Initialize User Name/Password……
Initialize user name and password.

Setting to Airplane mode

When Airplane mode is set, all wireless functions of the terminal (phone calls, packet communication, etc.) are disabled.

1 **From the Home screen, ☰ ▶ "Settings" ▶ "Wireless & networks"**

2 **Mark the "Airplane mode" checkbox**

NOTE

- Checking "Airplane mode" also turns off the Wi-Fi and Bluetooth functions, but they can be turned on again in Airplane mode.

Wi-Fi settings

1 **From the Home screen, ☰ ▶ "Settings" ▶ "Wireless & networks" ▶ "Wi-Fi settings"**

2 **Select any item:**

Wi-Fi……Turns on/off Wi-Fi.

Network notification……Set whether to notify when an open Wi-Fi network is detected.

Wi-Fi Easy Settings → P.60

Add Wi-Fi network → P.61

NOTE

- Packet communication is still available when Wi-Fi is turned on. However, if the terminal is connected to a Wi-Fi network, the Wi-Fi network takes precedence. When the Wi-Fi network is disconnected, the terminal automatically connects to the 3G/GPRS network. If you continue using the terminal connected to the 3G/GPRS network, note that you will incur costly packet communication charges.
- When is displayed on the status bar, Auto-IP connection is intended and does not allow internet connection including application communication.
  Check the radio wave condition and password (security key) and reconnect it before connecting to the Internet.

Using other Wi-Fi network functions

- Please turn on Wi-Fi beforehand.

1 **From the Home screen, ☰ ▶ "Settings" ▶ "Wireless & networks" ▶ "Wi-Fi settings"**

2 **☰ ▶ select any item:**

Scan……A scan of Wi-Fi networks starts, and a list of available Wi-Fi networks is displayed.

Change priority……Change the priority of Wi-Fi networks to be used. Touch and hold the name of a network you want to change to switch its priority.

Advanced……Configure advanced settings.

Wi-Fi sleep policy……Configure sleep settings for Wi-Fi.
Set Wi-Fi to enter sleep if no keys are pressed for 15 minutes after the screen dims. After entering sleep, Wi-Fi connection will be closed, but it will connect to an access point automatically once a screen lights.
You can also set the Wi-Fi function not to enter sleep either at any time or during charging.

MAC address……A MAC address is displayed.

IP address……The IP address currently used is displayed.

Handover……Set whether to enable handover.
* Enable this to change over to the access point with the same "Network SSID", "Security" and "Password".

Proxy……Set whether to use a proxy server.

Advanced settings for proxy
……Configure detailed proxy settings.

Use static IP……Set whether to specify static IP address for connecting with a Wi-Fi network. If checkmarked, "IP address", "Gateway", "Netmask", "DNS 1", and "DNS 2" can be set. To use a static IP address, "IP address", "Gateway", "Netmask", and "DNS 1" need to be set.

IP address……Set an IP address.

Gateway……Set a gateway.

Netmask……Set a net mask.

DNS 1……Set DNS 1.

DNS 2……Set DNS 2.

Bluetooth Communication

Connect the terminal and a Bluetooth-compatible device via Bluetooth communication. You can connect a Wireless Earphone Set 02 (option), etc. to the terminal, and talk on the phone or listen to music while the terminal is still in your bag.

- There is no guarantee that the terminal is capable of wireless communication with all types of Bluetooth devices.
- For information about the settings and operation procedures, see also the instruction manual of the Bluetooth-compatible device.

Precautions when using Bluetooth devices

● Note the following in order to ensure a good connection.

- Connect with another Bluetooth device within about a 10-meter viewable distance. Depending on surroundings (walls, furniture, etc.) and building structure, the connectable distance is shorter. The connectable distance will also be shorter if an obstacle is between the terminal and another Bluetooth device. Connection may be unestablishable if the terminal and thedevice are located on opposite sides of walls containing metal rods, such as on upper and lower storeys or in adjoining rooms, especially in a building made of reinforced concrete.
  Also note that the above connection distances are not guaranteed.
- Connect the terminal distanced from other devices (electric products/AV equipment/OA equipment, etc.) as much as possible (since the terminal is easily affected by a microwave oven in use, distance the terminal as far as possible). If the terminal is brought closer when another device is on, it may be unable to connect normally or may be a cause of television and radio noise or interference (television picture may be unclear for particular UHF or satellite channels).
- If you cannot connect normally due to a nearby broadcasting station, wireless transmitter, etc. change the location of the partner Bluetooth device. You may not be able to connect normally if surrounding radio waves are too strong.
- You can establish a wireless connection while a Bluetooth device is in a bag or pocket. However, if you body is located between the Bluetooth device and the terminal, decreased communication speed or noise may occur.

- Bluetooth devices and wireless LAN (IEEE 802.11 b/g/n) use the same frequency band (2.4 GHz). If you use the terminal or Bluetooth device near a device equipped with a wireless LAN, radio wave interference may occur and can result in decreased communication speed, noise, a poor connection, etc. If this happens, do the following.
  - Keep the terminal and a Bluetooth device in wireless connection at least 10 m from a wireless LAN.
  - Turn off a wireless LAN when used within 10 m.
- The radio waves emitted by a Bluetooth device may affect operation of medical electronics or other equipment. Since it may be the cause of an accident depending on circumstances, turn off the terminal and any nearby Bluetooth devices in the following places.
  - Trains
  - Airplanes
  - Hospitals
  - Locations near automatic doors and emergency alert devices
  - Places with ignitable gas, such as gas stations

Connecting to a Bluetooth device

To connect the terminal with another Bluetooth device and exchange data, first carry out pairing (connection setting) with the other Bluetooth device and then connect.

- Some Bluetooth devices only pair, and some Bluetooth devices proceed all the way to connection.
- Turn on the partner's Bluetooth function and check that it is connectable beforehand.

1 From the Home screen, ☰ ▶ "Settings" ▶ "Wireless & networks" ▶ "Bluetooth settings"

2 Mark the "Bluetooth" checkbox ▶ "Scan for devices"

- A scan for devices starts and a list of available Bluetooth devices is displayed.
- To let the terminal be recognizable by the partner Bluetooth device, tap "Discoverable".

3 Tap the Bluetooth device you want to communicate with

- Connection may be established with this procedure, depending on the Bluetooth device.

4 "Pair" or enter the passcode (PIN) ▶ "OK"

■Canceling the Bluetooth device connection

▶ Tap the Bluetooth device to disconnect ▶ "OK"

- To cancel pairing, touch and hold the Bluetooth device you want to disconnect, and tap "Unpair" or "Disconnect & unpair".

■Selecting the connection type

▶ Touch and hold a paired Bluetooth device ▶ "Options..." ▶ checkmark the connection type

- Only supported Bluetooth devices are selectable.

NOTE

- When not using the Bluetooth function, turn off the Bluetooth function to prevent battery consumption.
- If the Bluetooth device is not SCMS-T-compliant, sound cannot be heard regardless of the audio data type.

Advanced settings when connected to a BLE-compatible device

You can connect to a BLE (Bluetooth Low Energy)-compatible device (G-SHOCK, etc.) and notify it of the terminal information (new call, new mail, etc.) or sync with the terminal clock. Set details such as what kinds of information are notified.

- Connect to a BLE-compatible device beforehand. → P.103

1 From the Home screen, ☰ ▶ "Settings" ▶ "Wireless & networks" ▶ "Bluetooth settings"

2 "Advanced settings"

3 Select any item:

Alert Notification……Set to notify you by a BLE-compatible device of new calls, new mail, etc.

Find Me……Set the beep made when you operate a BLE-compatible device to ring the terminal.

Proximity……Set the notification level or no notification by a BLE-compatible device when canceling its connection with the terminal.

Time……Set whether to sync a BLE-compatible device clock with the terminal's clock.

NOTE

- The following applications can be linked to a BLE-compatible device.
  - Phone
  - spモードメール (sp-mode mail)
  - Email
  - Gmail
  - Messaging
  - Pedometer
  - Clock
  - Calendar

Using USB tethering

Connect the terminal to a USB-supported PC, etc. and access the Internet using mobile network communication. Use the microUSB cable for PC connection (sample) to connect the terminal and the PC or other device.

1 Connect the terminal to a PC with the supplied microUSB cable for PC connection

2 From the Home screen, ☰ ▶ "Settings" ▶ "Wireless & networks" ▶ "Tethering"

3 Checkmark "USB tethering"

4 Confirm details of notices ▶ "OK"

■Removing the microUSB cable for PC connection → P.133

NOTE

- The following are PC operating requirements (supporting OS) for USB tethering.
  - Windows XP
  - Windows Vista (32-bit/64-bit)
  - Windows 7 (32-bit/64-bit)
- A special driver is required for communication via USB tethering.
  For details including downloading a driver, refer to the following website.
  http://www.n-keitai.com/guide/download/
  (in Japanese only)

Using Wi-Fi tethering

You can use the tethering function via Wi-Fi connection. Using the terminal as an access point (main device), you can use a Wi-Fi-compatible device (subdevice) to connect to the Internet or enjoy gaming services.

1 From the Home screen, ☰ ▶ "Settings" ▶ "Wireless & networks" ▶ "Tethering"

2 "Wi-Fi tethering settings"

3 "Configure Wi-Fi hotspot" ▶ set "Network SSID", "Security", and "Password" ▶ "Save"

- "Network SSID" is set to "N-05D-XXXXXX" by default.

4 Checkmark "Wi-Fi tethering" ▶ confirm details of notices ▶ "OK"

5 Set the same network SSID and security on the Wi-Fi-compatible device (subdevice) as on the terminal

- The Wi-Fi-compatible device (subdevice) and the terminal (main device) connect.

NOTE

- Up to 5 Wi-Fi-compatible devices can connect at the same time.
- The "Security" setting is "Open" by default. Select from "Open", "WEP", "WPA PSK" (TKIP), "WPA2 PSK" (AES), and "WPA/WPA2 PSK" (TKIP/AES mixed) as necessary.
- The channel sets automatically to one of 1ch, 6ch, and 11ch. Since a Wi-Fi-compatible device (subdevice) may not be able to connect depending on its settings, be sure to check settings on any device you want to connect.

Connecting to a VPN (Virtual Private Network)

A VPN (Virtual Private Network) is technology allowing connection externally to information on a protected local network such as in a corporation or university. When configuring VPN connection from the terminal, obtain security information from the network administrator.

- A VPN (PPTP) is unavailable if the access point is set to sp-mode.

Adding a VPN

1 From the Home screen, ☰ ▶ "Settings" ▶ "Wireless & networks" ▶ "VPN settings"

■Adding PPTP

▶ "PPTP" ▶ "Add PPTP VPN" ▶ follow the administrator's instructions to configure each item of the VPN setting ▶ ☰ ▶ "Save"

■Adding IPSec/L2TP

▶ "IPSec/L2TP" ▶ ☰ ▶ "New" ▶ enter keystore password ▶ follow the administrator's instructions to configure each item of the VPN setting ▶ "Finish"

- Enter any text for the keystore password. Enter the same text the next time you enter the keystore password.

Connecting to a VPN

1 From the Home screen, ☰ ▶ "Settings" ▶ "Wireless & networks" ▶ "VPN settings"

■Connecting by PPTP

▶ "PPTP" ▶ tap the VPN you want to connect to ▶ enter the required information to connect ▶ "Connect"

■Connecting by IPSec/L2TP

▶ "IPSec/L2TP" ▶ tap the VPN you want to connect to ▶ "Connect" ▶ enter keystore password

Disconnecting from a VPN

1 Open the Notifications panel and tap the notification for the VPN connection

■Disconnecting PPTP

▶ Tap the connected VPN

■Disconnecting IPSec/L2TP

▶ Tap the connected VPN ▶ "Disconnect" ▶ "OK"

Call Settings

Configure settings for caller reject, network services, Internet telephoning, etc.

1 From the Home screen, ☰ ▶ "Settings" ▶ "Call settings"

2 Select any item:

Power key ends call……Set to end calls using the power key. During a call in sleep mode, cancels sleep mode instead of ending the call.

Call rejection……Rejects calls from designated numbers.

Not saved in Contacts……Rejects calls from callers not registered in Phonebook.

Unknown……Rejects calls from callers unable to notify their caller ID.

Payphone……Rejects calls from pay phones.

User unset……Rejects calls from callers who do not notify their caller ID.

Specified numbers……Rejects calls from numbers added to the "Call rejection list".

Call rejection list……Displays list of numbers that are rejected based on "Specified numbers". Tap "Add phone number" to add a number. Enter a number directly, or tap 👤 to add a number from Phonebook/call log.

Network service → P.90

Roaming settings……Configure settings for roaming overseas.

Advanced call settings……Configure detailed call settings.

Femtocell search……Search signals in the vicinity to connect to a femtocell.

Accounts……Set an account for Internet calls.

Use Internet calling……Set method for Internet calls.

docomo service

Configure settings such as a docomo application password and AUTO-GPS.

1 From the Home screen, ☰ ▶ "Settings" ▶ "docomo service"

2 Select any item:

Application manager……Set regular checks for updates, etc.

Wi-Fi……Set to use docomo service via Wi-Fi.

docomo apps password……Set a password to use with docomo applications.

AUTO-GPS……Configure AUTO-GPS function settings, etc.

Open source licenses……Confirm open source licenses.

Sound

This allows you to configure various sound settings, such as Silent mode and ringtones.

1 **From the Home screen, ☰ ▶ "Settings" ▶ "Sound"**

2 **Select any item:**

Silent mode……Set the terminal not to emit sound, etc. for etiquette when in a public or similar place.

- Alternatively, press the power key for 1 second or longer, and then tap "Silent mode".

Vibrator……Set vibration for incoming calls.

Volume……Set the volume for ringtones, media playback sound, alarm sound, etc.

Phone ringtone……Set the ringtone.

Notification ringtone……Set sound for email and other notifications.

Audible touch tones……Set dial button operation sound on/off when entering a phone number, etc.

Audible selection……Set operation sound on/off when selecting from a menu.

Screen lock sounds……Set operation sound on/off when locking/unlocking the screen.

Touch feedback settings……Set to vibrate interlocking sounds or operation of the terminal.

Touch feedback……Set to vibrate when operating the terminal.

Active Theme……Set a vibration type.

Reverb……Set to vibrate interlocking sounds of the terminal. Vibration intensity can also be set.

Display

Set brightness and other screen settings including font, key illumination, and touch panel sensitivity.

1 **From the Home screen, ☰ ▶ "Settings" ▶ "Display"**

2 **Select any item:**

Brightness……Adjust the brightness of the display. Mark the "Automatic brightness" checkbox to detect surrounding brightness and adjust automatically.

Auto-rotate screen……Set whether the display switches automatically according to the orientation of the terminal.

Animation……Set the animation to display when the screen switches.

Screen timeout……Set the time until the backlight turns off. For approx. 5 seconds after it turns off, you can tap ☰ ⌂ ⮌ to turn it back on.

Select Font……Set the font for displayed text.

Touch panel Setting……Configure the touch panel settings.

Touch panel sensitivity……Set the touch panel to be more sensitive to operation.

Incoming call lamp……Set the illumination pattern and color of the notification LED for incoming calls.

Notification lamp……Set the notification LED to flash for missed calls, new mail, and new messages.

NOTE

<Brightness>

- When the battery level becomes low, "Brightness" automatically sets to its minimum to conserve power.

<Notification lamp>

- The notification LED sometimes flashes regardless of the notification lamp setting, depending on the application (Gmail, etc.).

eco mode

You can set eco mode to reduce power consumption.

1 From the Home screen, ☰ ▶ "Settings" ▶ "eco mode"

2 Select any item:

eco mode……Set eco mode.

OFF……Set eco mode off.

Auto……Set to "Original eco mode" or "Full eco mode" automatically according to the battery level set with "Auto setting".

Original eco mode……Configure eco mode with "Original eco mode settings".

Full eco mode……Set an eco mode that keeps battery consumption to a minimum.

Original eco mode settings……Configure operation when Original eco mode is set.

Brightness……Dims the display.

Screen timeout……Set the time until the backlight turns off.

Stop touch feedback……Set the touch feedback off.

Turn off Bluetooth……Set the Bluetooth function off.

Turn off Wi-Fi……Set the Wi-Fi function off.

Unuse GPS satellites……Set the GPS function off.

Stop sync……Stop application synchronization.

Stop live wallpapers……Sets a still image as wallpaper when live wallpaper is set.

Auto setting……Set the battery level at which Original eco mode or Full eco mode turns on automatically, when eco mode is set to "Auto".

Advice for saving energy……Displays tips for saving on battery power.

Location & Security

Configure settings such as for security lock and obtaining location information.

1 From the Home screen, ☰ ▶ "Settings" ▶ "Location & security"

2 Select any item:

Use wireless networks → P.147

Use GPS satellites → P.147

Set up (Change) unlock security……Configure unlock security codes for unlocking the screen, Osaifu-Keitai, etc. You can set a pattern, lock number, or password.

Screen lock security……Configure to enter an unlock security code for unlocking the screen.

Set up Osaifu-Keitai lock → P.155

PIN setting → P.112

Visible passwords……Set to display characters when entering a password.

Select device administrators……Enable/disable administrators for the terminal.

Device security policy……Check security information set by a remote administrator. You can also encrypt the terminal or microSD card data.

- If you update data from within another application while encrypting/decrypting data, the terminal may no longer function properly.

Use secure credentials……Permit access to safe certificates and other credentials information.

- A credentials information storage password must be set beforehand.

Install from SD card……Install an encrypted certificate from a microSD card.

Set password……Set a password for credentials information storage.

Clear storage……Delete all credentials information and reset the credentials information storage password.

Setting device administrators

Set administrators for the terminal to be enabled/disabled.

- Before using Omakase Lock, you must enable "Omakase Lock". Omakase Lock is unavailable as of February, 2012.

1 From the Home screen, ☰ ▶ "Settings" ▶ "Location & security" ▶ "Select device administrators"

2 Select administrators ▶ "Activate" / "Deactivate"

Security codes used with the terminal

Some features of the terminal require security codes, to make various functions more convenient. These include a password for locking the terminal and a network security code for network services. By using different codes for different purposes, you can get the most out of the terminal.

Precautions for all security codes

- Avoid setting security codes using your birthday, part of your phone number, your address or room number, "1111" or "1234" that can be easily guessed by others. Be sure to write down the security codes and store them in a safe location.
- Do not reveal your security codes to others. DOCOMO is not responsible for damage caused by misuse of your revealed security codes by others.
- If you forget your security codes, you need to bring your identification document (driver's license, etc.), the terminal and the miniUIM to a docomo Shop Service Counter. For details, contact "General Inquiries" provided on the last page of this manual.

● Your PIN unblocking key is written in the application form (copy for subscriber) given at the time of contract. If you have subscribed at a place other than a docomo Shop, bring your identification document (driver's license, etc.) and the miniUIM to a docomo Shop Service Counter, or contact "General Inquiries" provided on the last page of this manual.

Network security code

The network security code is a 4-digit number necessary for using the docomo Network Services or identification at reception of your request in docomo Shop or at docomo Information Center. It can be set any number at the subscription and also changed later by yourself.
You can change your network security code to the new one from your PC if you have a "docomo ID/Password" for General support site for PC "My docomo".

● For information about "My docomo", see P.203 of this manual.

PIN1 code

The miniUIM has a settable security code, PIN1 code. It is set to"0000"(four zeroes) at the time of subscription, but you may subsequently change it.

PIN1 code is a 4- to 8-digit number (code) that is entered to confirm the user when the miniUIM is inserted in the terminal or the terminal power is turned on. It is intended to prevent unauthorized use by a third party. Entering PIN1 code makes the terminal operable.

● If you want to use a miniUIM that has been used on a different terminal, use the same PIN1 code that had been set on the different terminal. The code is "0000" if the default setting has not been changed.
● If you enter the incorrect PIN1 code 3 times in succession, the PIN1 code is locked. Unlock using "PIN unblocking key".

Enabling the miniUIM's PIN

Set to require entry of the PIN1 code when power is turned on.

1 From the Home screen, ☰ ▶ "Settings" ▶ "Location & security" ▶ "PIN setting"

2 "PIN1 code entry set"

■To change the PIN1 code

▶ "Change SIM PIN" ▶ enter the current PIN1 code ▶ "OK" ▶ enter the new PIN1 code ▶ "OK" ▶ enter the new PIN1 code again ▶ "OK"

• "PIN1 code entry set" must be enabled beforehand.

3 Enter the PIN1 code ▶ "OK"

PIN unblocking key (PUK)

The PIN unblocking key (PUK) is an 8-digit number used to unblock the PIN1 code. You cannot change the key yourself.

- If you enter the incorrect PIN unblocking key 10 times in succession, the miniUIM is locked. If this happens, please contact a docomo Shop.

■Unblocking the PIN1 locked miniUIM

- When the message indicating that PIN1 is locked is displayed, perform the following to unlock.
  "Emergency call" ▶ Enter "＊＊05＊ [PIN unblocking key]＊[new PIN1 code]＊[new PIN1 code]#"
- For example, to change the miniUIM PIN1 code to "2580" when the PIN unblocking key is "88888888", enter "＊＊05＊88888888＊2580＊2580#"

Applications

This allows you to configure application management settings.

1 From the Home screen, ☰ ▶ "Settings" ▶ "Applications"

2 Select any item:

Unknown sources……Set whether to allow installation of applications obtained from non-Android Market sites, email, etc.
* Download only applications from reliable publishers to protect the terminal and the personal data.

Manage applications……You can check name, version, etc. of applications, or force-close/delete/etc. applications.

Running services……You can display a service that is running to stop it, change its settings, etc.

Storage use……Display the state of storage use for an application.

Battery use……Check the amount of battery used for each application.

Development……Configure various settings required for application development.

Accounts & Sync

You can configure accounts for online services such as Twitter, Facebook, Google, mixi, Microsoft® Exchange ActiveSync®, to synchronize data as well as exchange data between the terminal and servers for the various services. If set to synchronize automatically, the terminal is automatically updated with update information via the web.

● Adding an account → P.62

1 From the Home screen, ☰ ▶ "Settings" ▶ "Accounts & sync"

2 Select any item:

Background data……Set whether all applications carry out data communication automatically.

Auto-sync……Set whether applications synchronize data automatically.

NOTE

- Depending on this setting, you may incur packet communication fees. The battery also depletes faster compared with when the checkbox is unmarked.

Starting synchronization manually

1 From the Home screen, ☰ ▶ "Settings" ▶ "Accounts & sync"

2 Tap the account you want to synchronize

■Deleting an account

▶ Tap the account you want to delete ▶ "Remove account" ▶ "Remove account"

3 ☰ ▶ "Sync now"

- To stop synchronization, tap ☰ and then tap "Cancel sync".

NOTE

<Deleting an account>

- To delete the Google account that was configured first, data on the terminal must be initialized. → P.114

Privacy

Set backup of the application for Android and delete the data.

1 From the Home screen, ☰ ▶ "Settings" ▶ "Privacy"

2 Select any item:

Back up my data……Back up application settings and data to the Google server.

Automatic restore……Set to restore the backed up settings and data when reinstalling an application.

Data transfer mode……Set a mode for using "iC transfer Service".

Factory data reset……Delete all data on the terminal and return it to its state at time of purchase. Mark the "Erase SD card" checkbox to delete all data on the microSD card.

Storage

You can check the capacity of the microSD card and the terminal, or format the microSD card.

1 **From the Home screen, ☰ ▶ "Settings" ▶ "Storage"**

2 **Select any item:**

Total space……Check the capacity of a microSD card.

Available space……Check the free space on a microSD card.

Unmount SD card…… Cancel recognition by the terminal so that the microSD card can be removed safely.
"Mount SD card" is displayed if the card needs to be mounted to ensure the microSD card can be recognized by the terminal.

Erase SD card……Format a microSD card. Note that formatting erases all content on a microSD card.

- Carry out "Unmount SD card" beforehand.

Available space……Check the free space on the terminal.

Search

You can configure the search function (P.82).

1 **From the Home screen, ☰ ▶ "Settings" ▶ "Search"**

2 **Select any item:**

- Displayed items differ with the application set.

Google search……Set Google search.

Show web suggestions……Display entry candidates when searching with Google.

Use My Location……Set to share the terminal's location information with Google.

Search history……Set to display the customized search history.

Manage search history……Manage the customized search history.

Searchable items……Specify icons for search range.

Clear shortcuts……Delete the history searched with the search box.

Language & Keyboard

This allows you to change the language and configure keyboard settings for using the terminal.

1 **From the Home screen, ☰ ▶ "Settings" ▶ "Language & keyboard"**

2 **Select any item:**

Select language……Change the language used on the terminal.

ATOK → P.69

Voice Input & Output

You can features such as voice search and the text-to-voice conversion function.

1 **From the Home screen, ☰ ▶ "Settings" ▶ "Voice input & output"**

2 **Select any item:**

Voice recognizer settings……Configure Voice recognizer settings.

Language……Configure the language settings for voice recognition.

SafeSearch……Configure search result filtering.

Block offensive words……Configure display of inappropriate results of voice recognition.

Text-to-speech settings……Configure text-to-speech settings.

Listen to an example……Plays a synthesized voice sample.

Always use my settings……Configure application settings to operate according to "Default Engine", "Install voice data", "Speech rate", and "Language" settings.

Default Engine……Configure the voice synthesizer engine settings for text reading out.

Install voice data……Install entities required for the voice synthesizer to run.

Speech rate……Configure the text reading out speed.

Language……Configure the language for text reading out.

Pico TTS……Configure the installed voice synthesis engine. Japanese support not provided.

Accessibility

Configure user-aide applications which react with sound or vibration when operated.

● Accessibility applications are not registered at time of purchase. You must download and install compatible applications beforehand from Android Market or other sites before you can set "Accessibility".

1 **From the Home screen, ☰ ▶ "Settings" ▶ "Accessibility"**

Date & Time

You can set the terminal's clock.

1 **From the Home screen, ☰ ▶ "Settings" ▶ "Date & time"**

2 **Select any item:**

Automatic……Set the time to be adjusted automatically.

Set date……Set the date manually.

Select time zone……Configure the time zone manually.

Set time……Set the time manually.

Use 24-hour format……Set the clock to 12-hour display or 24-hour display.

Select date format……Set the date display format.

About Phone

You can check the terminal's state, update software, or upgrade the OS.

1 **From the Home screen, ☰ ▶ "Settings" ▶ "About phone"**

2 **Select any item:**

Software Update → P.179

Major updates → P.183

MEDIAS NAVI……Set to receive update notifications from MEDIAS NAVI.

Status……Check battery level, your phone number, etc.

Battery use……Check the amount of battery used for each application.

Legal information……Check the open source license and Google usage agreement.

Model number……Check the terminal's model number.

Firmware version……Check the firmware version.

Baseband version……Check the baseband version.

Kernel version……Check the kernel version.

Build number……Check the build number.

sp-mode Mail

This allows you to send and receive emails using an i-mode mail address (@docomo.ne.jp). It allows you to use smileys and Deco-mail®, and also supports auto receive.

- For more information on sp-mode mail, refer to "ご利用ガイドブック (spモード編)" (Mobile Phone User's Guide [sp-mode], in Japanese only).

1 From the application list screen, "spモードメール" (sp-mode mail)

- The first time you launch sp-mode mail, download the application after agreeing terms of usage.

SMS

You can send and receive text messages with a mobile phone number as the address.

1 From the application list screen, "Messaging"

- The message screen appears.

■Creating and sending SMS

▶ "New message" ▶ enter the number in "To", and the message in "Type to compose" ▶ "Send"

■Displaying sent/received SMS

▶ Tap a message thread

■Replying to SMS

▶ Tap the address you want to reply to ▶ enter the message ▶ "Send"

■Forwarding SMS

▶ Tap a message thread ▶ touch and hold the SMS you want to forward ▶ "Forward" ▶ enter the forwarding phone number in "To" ▶ "Send"

■Add an SMS phone number to Phonebook

▶ Touch and hold a message thread ▶ "Add to Phonebook" ▶ "Register new" or tap an entry

■Importing/exporting SMS from/to a microSD card

▶ [≡] ▶ "Import/Export" ▶ "Import from SD card"/ "Export to SD card"

NOTE

- While entering a message, ☰ ▶ You can use "Insert smiley" to insert smileys that will be displayable on any terminal with Android installed. They are displayed as emoticons while being entered, but are displayed as smileys once received by an Android terminal.
- You can also send/receive SMS messages to/from users of overseas network operators. For available countries/compatible overseas network operators, see "Mobile Phone User's Guide [International Services]" or the DOCOMO "International Services website".
- To send SMS messages to users of overseas network operators, enter "+" → "Country code" → "the recipient mobile phone number". Omit "0" if the recipient phone number starts with "0". You can also send an SMS message by entering "010" → "Country code" → "the recipient mobile phone number".

Deleting SMS

1 From the application list screen, "Messaging"

■Deleting one message

▶ Tap a message thread ▶ touch and hold the SMS you want to delete ▶ "Delete message" ▶ "Delete"

■Deleting a message thread

▶ Touch and hold the message thread you want to delete ▶ "Delete thread" ▶ "Delete"

- All SMS messages in a message thread are deleted.

■Deleting all message threads

▶ ☰ ▶ "Delete threads" ▶ "Delete"

■Setting automatic deletion for SMS

▶ ☰ ▶ "Settings" ▶ mark the "Delete old messages" checkbox ▶ "Text message limit" ▶ enter a messages limit for each message thread ▶ "Set"

NOTE

- You can protect SMS with the following operations.
  From the message screen, tap a thread ▶ touch and hold the SMS you want to protect ▶ "Lock message"

Changing SMS settings

1 From the message screen, ☰ ▶ "Settings"

2 Tap the item to set

■Configuring a notification for new SMS

▶ Select any item:

Notifications……Set whether a notification appears in the status bar for new SMS.
Select ringtone……Set a ringtone for notifying new SMS.
Vibrate……Set vibration for when there is notification of new SMS.

Email

By setting an email account provided by mopera U or any general service providers on the terminal, you can send and receive emails in the same way as your PC.

● "Setting an Email account"→ P.62

Displaying email

1 From the application list screen, "Email"

- The inbox screen appears.

■Refreshing the Inbox

▶ [≡] ▶ "Refresh"

- The terminal receives any new email, and displays it in the "Inbox".

2 Tap the email you want to read

■Replying to email

▶ "Reply"/"Reply all" ▶ enter a message ▶ "Send"

■Forwarding email

▶ [≡] ▶ "Forward" ▶ enter the forwarding email address in "To" ▶ "Send"

■ Deleting email

▶ "Delete"

Creating and sending email

1 From the inbox screen, [≡] ▶ "Compose"

2 Enter the partner email address in "To"

■Adding a Cc or Bcc

▶ [≡] ▶ "Add Cc/Bcc"

3 Enter a title in "Subject"

4 Enter a message in "Compose Mail"

■Adding an attachment

▶ [≡] ▶ "Add attachment" ▶ tap the type of attachment ▶ tap the attachment

5 "Send"

Opening mailboxes

1 From the inbox screen, [≡] ▶ "Folders"

- The Inbox, Outbox, etc. are displayed.

■Importing/exporting email from/to a microSD card

▶ [≡] ▶ "Import/Export" ▶ "Import"/"Export to SD card"

Changing email settings

1 From the inbox screen, ☰ ▶ "Account settings"

■Switching email accounts

- You can switch email accounts when two or more accounts are configured.

▶ "Accounts" ▶ tap the email account to switch to

2 Tap the item to set

■Setting a notification for new email

▶ Select any item:

Email notifications……Set whether a notification appears in the status bar for new email.

Select ringtone……Set a ringtone for notifying new email.

Vibrate……Set vibration for when there is notification of new email.

■Setting automatic check of new email

- You can set the terminal to check automatically if new email has arrived at the server.

▶ "Inbox check frequency" ▶ "Never" or set the interval to automatically check at

- If you set to connect to the server at a certain interval, and if you are using a pay-as-you-go plan, you will incur a charge whenever the terminal checks for new email.

Gmail

Gmail is an email service provided by Google. You can use Gmail to send and receive email with the terminal.

● You must configure a Google account to use Gmail. → P.62

Viewing an email

1 From the application list screen, "Gmail"

- The message thread list screen appears.
- In Gmail, email is displayed grouped into a message thread according to reply. If newly arrived emails are replies to an existing email, they will be grouped into the same message thread. A new thread is created for newly created email and changes of subject name.

■Switching accounts

▶ ☰ ▶ "Accounts" ▶ tap the account you want to display

■Refreshing Gmail

▶ ☰ ▶ "Refresh"

- Synchronize the Gmail on the terminal and on the website, and refresh the Inbox.

■Searching email

▶ ☰ ▶ "Search" ▶ enter a keyword in the search box ▶ "🔍"

2 Tap a message thread

- When there are two or more emails in the thread, tap "X read messages" to display a list of messages. You can tap the message you want to read and check it.
- You can tap to add, check, etc. entries to Phonebook.

■Replying to email

▶ "↩" ▶ enter a message ▶ ☰ ▶ "Send"

- To reply to all members, tap " ◀ " and tap "Reply all".

■Forwarding email

▶ " ◀ " ▶ "Forward" ▶ enter the forwarding email address in "To" ▶ ☰ ▶ "Send"

■Deleting email

▶ "Delete"

Creating and sending email

1 From the message thread list screen, ☰ ▶ "Compose"

2 Enter the partner email address in "To"

■Adding a Cc and Bcc

▶ ☰ ▶ "Add Cc/Bcc"

3 Enter a title in "Subject"

4 Enter a message in "Compose Mail"

■Adding an attachment

▶ ☰ ▶ "Attach" ▶ tap the attachment

5 ☰ ▶ "Send"

Managing message threads

1 From the message thread list screen, touch and hold a thread

2 Select any item:

Read……Open a message thread.

Archive……Archive (store) message threads. Archived message threads are not displayed in the Inbox.

Mute……Hide message threads.

Mark unread/Mark read……Designate a message thread as unread/read.

Delete……Delete a message thread.

Add star/Remove star……Assign/remove a star from a message thread.

Change labels……Add/change the label of a message thread.

Report spam……The message thread is deleted and is reported to Google as spam.

Help……The Google mobile help page is displayed.

■Showing archived or muted message threads.

From the message thread list screen, [≡] ▶ "Go to labels" ▶ "All Mail"

NOTE

- Labels cannot be created on the terminal. Create labels on the Gmail website.

Display message threads by label

You can display only the message threads for which "Change labels" is set.

1 From the message thread list screen, [≡] ▶ "Go to labels"

2 Tap the type of label you want to display

- You can also configure settings to only show message threads with a star (★), sent email, etc.

Changing Gmail settings

1 From the message thread list screen, [≡] ▶ "More" ▶ "Settings" ▶ tap "General preferences" or the account to set

2 Tap the item to set

■Setting a notification for new email

▶ checkmark "Email notifications" ▶ "Labels to notify" ▶ tap a label to set ▶ Select any item:

Email notifications……Set whether a notification appears in the status bar for new email.

Ringtone……Set a ringtone for notifying new email.

Vibrate……Set vibration for when there is notification of new email.

Notify once……Set to notify only the first new mail and not for every new mail.

Early Warning "Area Mail"

When the terminal is in service range, it can receive emergency and other reports from the weather bureau and municipal governments.

- Area Mail is a free service available without subscription.
- Area Mail cannot be received in the following instances.
  - Out of service area
  - Power is off
  - Roaming overseas
  - In Airplane mode
  - Using an other-carrier SIM card
  - During a call
- Area Mail might not be received in the following instances.
  - During packet communication (during data transmission)
  - During Wi-Fi tethering
  - During USB tethering
  - During a software update
  - During a major software update
  - With only little memory capacity remaining on the terminal
- Area Mail that you could not receive cannot be received later.

Receiving early warning "Area Mail"

A notification screen will appear, and a buzzer (earthquake alert)/ringtone (non-earthquake alert (disaster/evacuation information/etc.)) will sound and the terminal will vibrate and the notification LED will flash to notify you.

- The volume of the buzzer and ringtone cannot be changed.

Viewing an Area Mail later

1. **From the application list screen, "Area Mail"**
2. **Tap the Area Mail**

Configuring early warning "Area Mail"

1. **From the application list screen, "Area Mail"**
2. **[≡] ▶ "Settings" ▶ select any item**

Receive setting……Set whether to receive Area Mail.

Beep tone……Set the beep tone.

Beep time……Set the time that the buzzer and Area Mail ringtone sound.

Beep in manner mode……Set whether the buzzer and Area Mail ringtone sound if Area Mail is received in manner mode.

Check screen image and beep tone……Check how the terminal operates when Area Mail is received for an earthquake alert and disaster/evacuation information.

Other settings……Configure other settings.

Receive entry……Register a "Message ID" (enter an ID obtained from a service provider) and "Area Mail name" (enter any name) for information you want to receive other than emergency information.

Google Talk

Google Talk is an online instant messaging service by Google. You can enjoy online chat (chatting by text) with a partner who has a Google account.

● Google Talk, you must set up your own Google account. → P.62

Getting ready for Google Talk

1 From the application list screen, "Talk"

• The talk screen appears.

■Adding a chat member.

▶ [≡] ▶ "Add friend" ▶ enter the Google account of the member you want to add ▶ "Send invitation"

• An invitation goes to the partner you are inviting.

■Accepting an invitation

• "Chat invitation" is displayed when you get an invitation.

▶ "Chat invitation" ▶ "Accept"

■Changing your online status and message

▶ Tap your account ▶ "▾" ▶ select the online status you want to set ▶ "Status message" ▶ enter a status message ▶ "Done"

■Changing Google Talk settings

▶ [≡] ▶ "Settings"

- You can configure whether to log into Google Talk automatically, erase search history, display notification icons, and configure ringtone/vibration settings.

■Logging out

▶ [≡] ▶ "Sign out"

NOTE

- When an invitation is accepted, it is removed from the list of pending invitations.

Chatting

1 In the talk screen, tap a chat member's name

■Switching chat members

▶ [≡] ▶ "Switch chats" ▶ tap a chat member's name

■Chatting with two or more partners

▶ [≡] ▶ "Add to chat" ▶ tap chat member's names

2 Enter a message ▶ "Send"

■Ending a chat

▶ [≡] ▶ "End chat"

- To end chat with specific members, touch and hold the chat member's names in the talk screen, and tap "End chat".

Browser

You can browse web pages using the browser. The terminal allows you to browse sites via packet communication and Wi-Fi.

Launching the browser and displaying a web page

1 From the application list screen, "Browser"

2 Tap the address bar ▶ enter a URL or keywords

- Once you enter a URL or keywords in the address bar, a list of candidates appears.

■Using voice search

▶ Tap the address bar ▶ " " ▶ clearly speak the search words into the microphone

3 "→" or tap the web page you want to display from the list of candidates

NOTE

- If latest updates have not been installed in the terminal for Flash Player, web contents may not be displayed. Access Android Market (P.144) and check the update information for Flash Player.

Operation while viewing a web page

■Scroll

- Slide in the direction you want to scroll → P.55

■Zoom in/out

- Slide two of your fingers apart/together where you want to zoom in/out → P.56
- Double-tap (tap twice) where you want to zoom in, then double-tap again to return to the original display

■Moving to before/after a web page

- [↩] to return to the previous page, [≡] ▶ "Forward" to go to the next page

Search text contained in a web page

1 While browsing a web page, [≡] ▶ "More" ▶ "Find on page"

2 Enter the search text

3 "◀"/"▶"

- Matching before/after text is displayed.

4 "×"

- End the search.

Copying text contained in a web page

1 While browsing a web page, [≡] ▶ "More" ▶ "Select text"

2 Drag the text to copy, and then drag ◢ to the start position and ◣ to the end position ▶ tap the selected text

NOTE

- The copied text can be pasted into other applications, such as a browser search box or email. Touch and hold the text box to paste to, and then tap "Paste".

Using bookmarks

Bookmarking a web page allows you to quickly access that web page.

Adding to bookmarks

1 In a web page you want to add, [≡] ▶ "Bookmarks"

- The bookmark appears as a thumbnail.

2 "★Add"

3 Check/change the bookmark name ▶ "OK"

Displaying web pages added to bookmarks

1 While browsing a web page, ☰ ▶ "Bookmarks"

■Viewing frequently visited web pages

▶ "Most visited" ▶ tap the web page you want to view

■Displaying web pages from browse history

▶ "History" ▶ tap the web page you want to view

■Importing/exporting bookmarks from/to microSD card

▶ ☰ ▶ "Import"/"Export"

2 Tap the bookmark you want to view

NOTE

- While "Most visited" or "History" is displayed, ☆ appears to the right of the web page name. You can tap this icon to add (★ is gold)/delete (☆ is gray) from bookmarks.

Opening a new browser window

You can open up to 8 web pages and switch between them easily.

1 While browsing a web page, ☰ ▶ "New window"

- A new browser window opens, and the set homepage is displayed.

■Switching between windows

▶ "Windows" ▶ tap the browser window you want to view

Using links in web pages

You can do the following with links appearing in web pages.

■URL

- Tap to open a web page.
- Touch and hold to add a URL to bookmarks, copy a URL, or display in a new window.

■Email address

- Tap to create email.
- Touch and hold to copy an email address.

■Phone number

- Tap to make a call.

Saving images appearing in web pages

1 While browsing a web page, touch and hold an image you want to save ▶ "Save image"

Checking a saved image

1 While browsing a web page, ☰ ▶ "More" ▶ "Downloads"

2 Tap the list

Changing browser settings

1 While browsing a web page, ☰ ▶ "More" ▶ "Settings"

2 Tap the items to set

■Displaying web pages always horizontally

▶ Mark the "Landscape-only display" checkbox

■Amount of web page zoom when double-tapped (tap twice)

▶ "Default zoom" ▶ "Far"/"Medium"/"Close"

■Changing the text size

▶ "Text size" ▶ "Tiny"/"Small"/"Normal"/"Large"/"Huge"

■Setting the homepage

- Set the page that is displayed when you open a new browser.

▶ "Set home page" ▶ enter the URL of the homepage you want to set ▶ "OK"

Infrared Data Exchange

The terminal can exchange Phonebook, sp-mode mail, schedule, and memo information, etc. with another terminal or other terminal that features the infrared data exchange function.

- Be sure the infrared data ports are aligned in parallel. Do not place anything between the terminals or block their infrared data ports.
- If the infrared data port has any dirt on it, wipe it off with a soft cloth so as not to damage the port. Damaging the port may cause the infrared data exchange to fail.
- Place the terminals within approx. 20 cm during infrared data exchange. Do not move the terminals until a message appears indicating exchange is complete.
- Under direct sunlight, fluorescent lighting, or near infrared devices, the terminal may not be able to communicate normally because of their effect.
- Depending on the other terminal, exchanging information may not be possible.

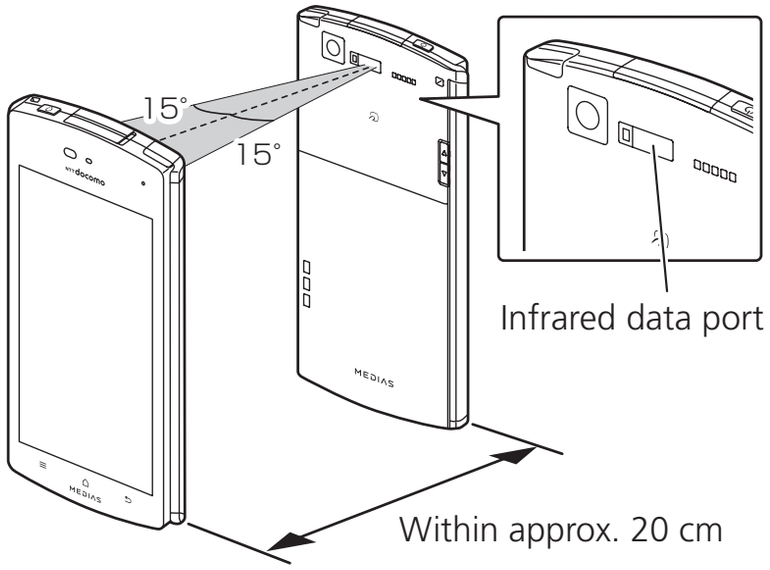

Sending an entry by infrared data exchange

<Example: Sending a Gallery image>

1 From the application list screen, "Gallery"

2 Display the image you want to send ▶ ☰ ▶ "Share" ▶ "Infrared" ▶ "OK" ▶ "OK"

Sending all the entries by infrared data exchange

<Example: Sending a Phonebook entries>

1 From the application list screen, "Infrared"

2 **"Send all" ▶ "Phonebook"**

■Sending sp-mode mail

▶ "sp-mode mail" ▶ "Inbox" / "Sent" / "Unsent"

■Sending schedule and memo

▶ "Schedule&Memo"

3 **"Start" ▶ enter your docomo application password ▶ "OK" ▶ enter your authentication password ▶ "OK"**

- Put the receiving the terminal on standby for reception.

4 **"OK"**

- Point the infrared data port to the receiving terminal.

5 **"OK"**

Receiving an entry by infrared data exchange

1 **From the application list screen, "Infrared"**

2 **"Receive"**

- Prepare the sending terminal to send.

3 **"OK"**

- Point the infrared data port to the receiving terminal.

4 **"OK" ▶ "OK"**

Receiving all the entries by infrared data exchange

1 **From the application list screen, "Infrared"**

2 **"Receive all"**

3 **Enter your docomo application password ▶ "OK" ▶ enter your authentication password ▶ "OK"**

- Prepare the sending terminal to send.

4 **"OK"**

- Point the infrared data port to the receiving terminal.

5 **"OK" ▶ "Save"**

Bluetooth Communication

You can use the Bluetooth communication function for wireless exchange of data with another Bluetooth device.

● Connecting to a Bluetooth device → P.103

Sending by Bluetooth communication

<Example: Sending a Gallery image>

1 From the application list screen, "Gallery"

2 Display the image you want to send ▶ ☰ ▶ "Share" ▶ "Bluetooth"

3 Tap the Bluetooth device you are sending to

Receiving by Bluetooth communication

1 Send a file from the sending terminal

- appears in the status bar.

2 Open the Notifications panel and tap the notification for the received Bluetooth file ▶ "Accept"

- Check receipt of the file from the Notifications panel, and register the file.

NOTE

- When exchanging data with a device having a Bluetooth function, differing profiles may prevent exchange of data.

Connecting to a PC

Connecting the terminal and a PC

Connect the terminal and a PC with the microUSB cable for PC connection (sample).

- When you plug in/unplug the microUSB cable for PC connection from the PC, hold the USB plug horizontally. → P.52

NOTE

- Connect the USB plug of the microUSB cable for PC connection directly to the USB port of the PC. If the cable is connected via a USB HUB or USB extension cable, a malfunction may occur.
- Do not unplug the microUSB cable for PC connection while data is being transferred. The data may be destroyed.

Using data on a microSD card

When you connect the terminal to a PC or other device by using the microUSB cable for PC connection (sample), you can read and write data on a microSD card from the PC.

1 Connect the terminal to a PC using the microUSB cable for PC connection

2 Open the Notifications panel, "USB Connection" ▶ "USB Mass Storage" ▶ "OK" ▶ "OK"

- You can now use your PC to display files on the microSD card.

Safely removing the microUSB cable for PC connection

1 Open the Notifications panel, "Turn off USB storage"/ "Disconnect" ▶ "OK"

■Using USB tethering

Open the Notifications panel, "USB tethering is active" ▶ Unmark "USB tethering" checkbox.

2 Remove the microUSB cable for PC connection (P.52)

Using PC Link

You can connect the terminal and a PC via a Wi-Fi connection, USB PC Link, to access files on your terminal from your PC using dedicated software or a dedicated browser.

- Use dedicated software to do the following.
  - Transfer PC files to a microSD card in the terminal
  - Copy the photos/videos from microSD card to a PC (Omakase Copy)
  - Import/export Phonebook entries, email, or bookmarks to a PC
  - Open a specified web site with the terminal
  - Search an application with the terminal
- Use a PC browser to do the following.
  - Browse/edit Phonebook and bookmarks on the terminal
  - Browse the Gallery on the terminal

Using PC Link with dedicated software

- Install dedicated software on your PC beforehand. Refer to the following site for software download and operating details. http://www.n-keitai.com/guide/download/ (in Japanese only)

1 From the Home screen, ☰ ▶ "Settings" ▶ "Wireless & networks" ▶ "PC Link settings"

2 "PC Link" ▶ check the host name ▶ "OK"

- PC link will be check marked.
- To change the host name, enter a host name and tap "OK".

3 Connect the terminal to your PC

- Connecting via Wi-Fi → P.60
- Connecting via USB PC Link → P.134

4 Launch the dedicated software on your PC

5 Enter a host name ▶ set the user name/password

- This step is done on your PC.
- The host name you enter here is the host name you checked in step 2.

- (User registration request) appears in the Notifications panel on the terminal.

6 Open the Notifications panel, "User registration request" ▶ check that the user name displayed on the terminal is the same as the user name entered on your PC ▶ "Yes" ▶ "OK"

- You can now access files on the terminal from your PC.

■Using PC Link with a browser

From the Home screen, [≡] ▶ "Settings" ▶ "Wireless & networks" ▶ "PC Link settings" ▶ check "Destination URL", and then enter the displayed URL in browser's address bar on your PC

Connecting the terminal and a PC via USB PC Link

You can now connect the terminal and a PC using the microUSB cable for PC connection (sample) to use PC Link.

1 Connect the terminal to your PC using the microUSB cable for PC connection

2 Open the Notifications panel, "USB Connection" ▶ "USB PC Link" ▶ "OK"

■Removing the microUSB cable for PC connection → P.133

NOTE

- Only one terminal can be connected via USB PC Link and recognized per one PC.

Using DLNA-compatible devices

You can play the image, video and music data saved in a microSD card with a DLNA (Digital Living Network Alliance) compatible TV or PC. You can also play the data of a DLNA compatible PC and network connection HDD (NAS) with the terminal.

- A Wi-Fi network connection is required to cooperate with DLNA-compatible devices. → P.100
- See the instruction manual of DLNA-compatible devices for operation on DLNA-compatible devices.
- This does not guarantee cooperation between the terminal and all DLNA-compatible devices.
- The terminal supports DTCP-IP. However, this does not guarantee cooperation with all DTCP-IP compatible devices.
- Some files may not be playable.

Starting the DLNA server

Start the DLNA server (DiXiM Server) of the terminal and allow access from DLNA-compatible devices.

1 **From the application list screen, "DiXiM Player"**

2 **"設定する（DIXIM SERVER)" (Setting)**

3 **Mark "DiXiM Server" checkbox ▶ "はい" (Yes)**

4 **"アクセス制御" (Access control) ▶ Select "クライアント機器の一覧" (Client device list) to check the DLNA-compatible devices to which access is permitted**

- Access to the terminal is permitted.

Playing or saving the data of the terminal with DLNA-compatible devices

Start the DLNA server (DiXiM Server) of the terminal and permit access from DLNA-compatible devices.

1 **Operate the data of the terminal from DLNA-compatible devices**

- Access the DLNA server (DiXiM Server) of the terminal and play or save the data.

NOTE

- Videos taken by a camera may not be playable on DLNA-compatible devices other than this terminal

Delivering the data of the terminal

If you deliver the data of the terminal, you can perform a play operation on the same.

- Start the DLNA server (DiXiM Server) of the terminal and permit access from DLNA-compatible devices. Ensure access from the terminal is permitted from DLNA-compatible devices.

1 **From the application list screen, "DiXiM Player"**

2 **"視聴する (DIXIM PLAYER)" (Play) ▶ Select the server name of the terminal on the server list**

3 **"設定" (Setting) on the bottom bar ▶ "タップ時の動作" (Tap operation) ▶ "リモート機器で再生" (Play on a remote device) ▶ "リモート機器を選択" (Select remote device) ▶ Select a destination of the DLNA-compatible device**

- The DLNA-compatible device previously used for playing is stored for the destination device.

4 **Select the playing type ▶ Select a folder ▶ Select contents**

5 **Play the contents on the player screen**

Playing the data of DLNA-compatible devices with the terminal

Disclose the data with DLNA-compatible devices in advance and permit access from the terminal.

1. **From the application list screen, "DiXiM Player"**
2. **"視聴する (DIXIM PLAYER)" (Play) ▶ Select the server name of the DLNA-compatible device on the server list**
3. **"設定" (Setting) on the bottom bar ▶ "タップ時の動作" (Tap operation) ▶ "この端末で再生" (Play on the terminal)**
   - Select "リモート機器で再生" (Play on a remote device) from "タップ時の動作" (Tap operation) and then the destination device to play contents on other DLNA-compatible devices.
4. **Select the playing type ▶ Select a folder ▶ Select contents**
5. **Play the contents on the player screen**

NOTE

- Press and hold the data for one second or more on the contents selection screen and slide it downward to download the data. Slide it upward to display the player list. You can select a DLNA support device and play contents. Note that you may not download data which has protected copyright.

Playing digital programs

You can save and play digital programs recorded on DLNA-compatible devices such as recorders on the terminal.

- DLNA-compatible devices should support uploading of the data.

1. **From the application list screen, "DiXiM Player"**
2. **"設定する (DIXIM SERVER)" (Setting)**
   - Mark "DiXiM Server" checkmark of "Setting the DLNA server" (P.138) to permit access from DLNA-compatible devices.
3. **Uploading from DLNA-compatible devices**
4. **From the application list screen, "DiXiM Player"**
5. **"視聴する (DIXIM PLAYER)" (Play) ▶ "持ち出し番組" (Takeout programs) on the bottom bar**

6 Select the data from the takeout program list ▶ Play it on the player screen

Setting the DLNA server

Set the server to disclose the data of the terminal on the home network.

1 From the application list screen, "DiXiM Player"

2 "設定する（DIXIM SERVER)" (Setting)

3 Tap the desired item

DiXiM Server……Check it to enable the server function. Uncheck it to disable the DiXiM Server.

サーバー名 (Server name)……You can change the name displayed on DLNA-compatible devices.

アクセス制限 (Access control)……Mark "アクセス権の初期設定" (Initialize access right) checkmark to permit access to the terminal from DLNA-compatible devices. Unmark it to permit access only to the DLNA-compatible device marked in "クライアント機器の一覧" (Client device list).

公開フォルダ設定 (Set public folder)……Set a public folder on a client device.

Camera

Before using the camera

- Insert a microSD card before using a camera. Photos and videos taken by this terminal are all stored in the microSD card.
- While the camera is built with high-precision technology, there may be cases where you see one or more partially dark or constantly bright points or lines. Note also that, when you shoot in a dark place, the camera may have more noise such as white lines.
- Before shooting, clean the lens with a soft cloth. A fingerprint or grease marked on the lens may put the camera out of focus or result in a blurry photo.
- After the terminal is left in a warm place for a long time, the image quality may degrade.
- The brightness and color in your photos and videos may differ from those of the actual object.
- Avoid leaving the lens exposed to direct sunlight for a long time or directly shooting the sun or a bright lamp. Doing so may cause malfunction, such as discoloration of shot images.
- When shooting, take care not to have your finger or hair or the strap block the lens.
- Since the camera consumes more battery power during shooting, you are advised to turn off the camera as soon as you finish shooting. Operating the camera on low battery may result in a dark or blurry screen.
- If image stabilization is set to OFF, moving the terminal during shooting may result in blurry images. Whenever possible, it is recommended to set image stabilization to "AUTO" when shooting.
- If the battery is low, you may not be able to save your photos and videos.
- Even in Silent mode, the camera makes the shutter sound for photo shooting and the video recording start/end sound. You cannot change the volume of these sounds or turn them off.
- The screen may flicker due to the effect of a fluorescent light when you take a photo indoors. In this case, you may reduce flickering by setting "Anti-flicker" to your local power frequency.

Copyright and portrait rights
Avoid copyright infringements when copying or editing photos and videos that have been shot on the terminal. You should also avoid infringing the portrait rights of other people by using or modifying their portraits without their consent. Note that the shooting or recording of stage performances, shows or exhibitions may be prohibited, even for personal use.
If your use of the terminal is inappropriate and a noticeable public annoyance, you may be subject to punishment according to federal or local legislation (public nuisance ordinances, etc.).

Please be considerate of the privacy of individuals around you when shooting and sending photos using camera-equipped mobile phones.

Viewing the camera screen

■Photos

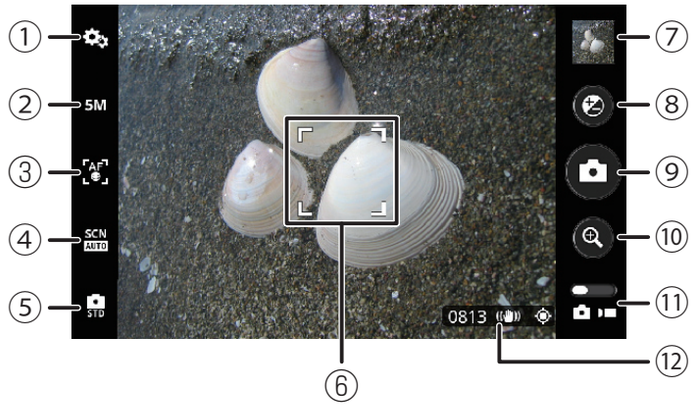

①Other Settings: Configure settings such as light, quality, image stabilization, selftimer.
②Size (image size)
③Auto focus
④Scene
⑤Camera Mode
- Standard: The standard camera mode.
- Quick Shot: Shoot rapidly in a short timeframe. To shoot more stunning photos, set the camera mode to "Standard".
- Best Photo: Shoots a succession of photos and selects the best 3 shots automatically.
- Continuous Shot: A mode for shooting from 5 to 100 shots in succession.
- Self Shot: Aids self-portraits by notifying you by sound and light when a face is detected. To shoot, tap the center of the screen to take the shot.
- Touch shutter: Allows you to shoot easily by tapping where you want to focus.

⑥Focus frame
⑦Gallery: Shot photos can be viewed.
⑧Brightness

⑨Shutter
⑩Zoom: Can also be adjusted with the volume key.
⑪Photo/video switch
⑫Number of remaining shots/image stabilization/ Location information acquisition status

■Videos

Before shooting

During shooting

①Other settings: Configures the settings about lighting, image quality, image stabilization, etc. can be made.
②Size (image size)
③Auto focus
④Scene
⑤Gallery: Shot videos can be played.
⑥Brightness
⑦Recording start/end
⑧Zoom: Can also be adjusted with the volume key.
⑨Photo/video switch
⑩Remaining shooting time/Image stabilization
⑪Shooting time elapsed

Shooting with the camera

Photos and videos shot on the camera are saved to the microSD card automatically. You can not shoot if the microSD card is not inserted.

Shooting photos

1 From the application list screen, "Camera"

2 Point the camera at a subject

3 "📷"

- The camera shoots a photo with a shutter click.

Shooting videos

1 From the application list screen, "Camera"

2

3 Point the camera at a subject

4 "⏺"

- Recording starts with a recording start sound.

5 "■"

- Recording ends with a recording end sound.

NOTE

- If there is a notification sound during video shooting, it may also be recorded.

Gallery

This allows you to show or play photos/videos saved to the microSD card from a camera, site download, etc.

- The following photo file formats can be displayed.
  JPEG (jpeg, jpg), GIF (gif), BMP (bmp), PNG (png)
- For details on video file formats can be played: → P.142

1 From the application list screen, "Gallery"

- Shot images, downloaded images, etc. are displayed in categories.

2 Tap a category

3 Tap the photo/video you want to view

- Tap to arrange the photos by shooting period.
- Touch and hold a category or photo/video to send data by Bluetooth communication or mail, or to delete data, check details, etc.

NOTE

- If you have many photos saved, Gallery may take time to read all the photos when it is activated.
- You cannot "Share" contents protected by Digital Rights Management (DRM) with other terminals.
- Contents protected under Digital Rights Management (DRM) can no longer be played back after initiating "Factory data reset".

Media Player

The Media Player plays video and music files stored on the microSD card.

- Save music files to the microSD card from a PC beforehand.→ P.132
- The following music file formats can be played.
  AAC LC/LTP, HE-AACv1 (AAC+), HE-AACv2 (enhanced AAC+) (3gp, mp4, m4a), AMR-NB, AMR-WB (3gp), MP3 (mp3), MIDI*, Ogg Vorbis (ogg), PCM/WAVE (wav), WMA (wma, asf), PlayReady (.isma)
  * Can be played, but do not appear listed with the Media Player application.
- The following video file formats can be played.
  H.263 (3gp, mp4), H.264 (3gp, mp4), MPEG-4 SP (3gp), WMV (wmv, asf), WebM (.webm), PlayReady (.ismv)

1 From the application list screen, "Media Player"

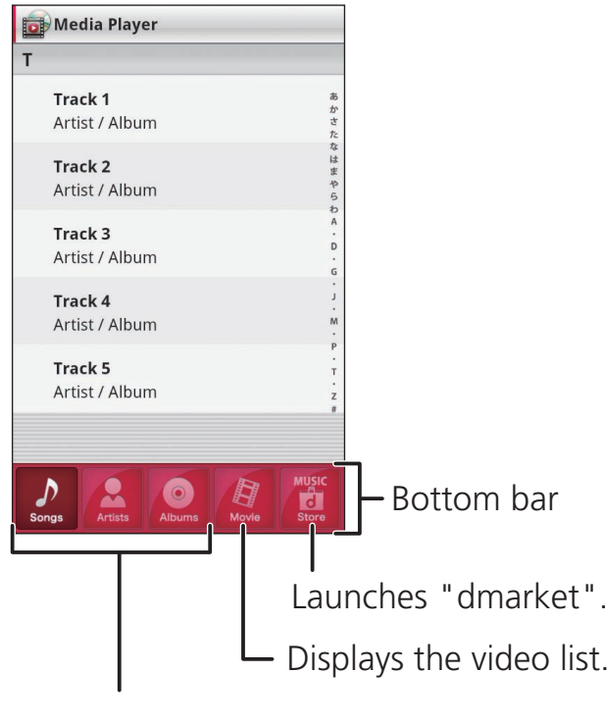

■Setting music as a ringtone

▶ ☰ ▶ "Settings" ▶ "Ringtone settings" ▶ tap the item to set ▶ tap the music you want to set ▶ "Apply" ▶ "Set"

■Deleting music and videos

▶ ☰ ▶ "Settings" ▶ "Delete contents" ▶ tap the 🗑 for the music/video you want to delete to turn it red ▶ "Del" ▶ "OK" ▶ "OK"

■Changing the placement of bottom bar icons

▶ ☰ ▶ "Settings" ▶ "Arrange icons" ▶ touch and hold the icon whose place you want to change ▶ drag to place in bottom bar you want to move it to ▶ "Apply"

- "Movie" and "Store" icons cannot be moved.

2 Tap the music or video

Music playback screen

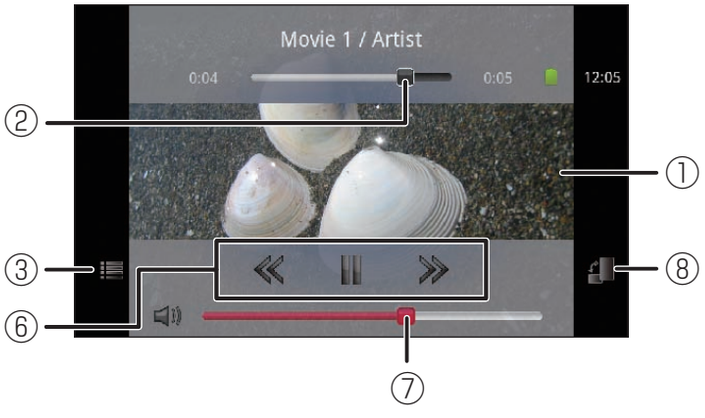

Video playback screen

①Album cover image or video
- Tap the album cover image to toggle show/hide for ②.
- Tap the video to toggle show/hide for ② – ⑧.

②Specify the playback position

③Return to list display
④Repeat off / repeat on / repeat 1 song
⑤Shuffle off / shuffle on
⑥Return to start of music/video or skip to previous song / playback or pause / skip to next song
⑦Adjust volume
⑧Toggle automatic screen rotation on/off

NOTE

- Contents protected under Digital Rights Management (DRM) can no longer be played back after initiating "Factory data reset".

Creating playlists

Use playlists to play back music in a preferred sequence.

1 From the application list screen, "Media Player"

2 From the bottom bar icons, "Play list"

- If "Play list" does not appear in the bottom bar, you can set it. → P.142

3 "New" ▶ tap playlist name ▶ enter a playlist name ▶ "OK"

4 "Add songs to playlist" ▶ tap the music you want to add

- You can also select music from "Artists" and "Albums".

- ⊕ turns red for selected music. Each time you press it, it is added to the playlist.

5 "Apply"

■Changing the sequence

▶Drag ≡ to the position you want

■Deleting music from a playlist

▶Tap 🗑 to turn it red

6 "Save" ▶ "OK"

Android Market

You can use Android Market to directly access useful applications and enjoyable games which can be downloaded and installed on the terminal.

1 From the application list screen, "Market"

- The market screen appears.
- The first time you launch Android Market, terms of usage are displayed. After confirming the terms of service, tap "Accept".

NOTE

- Check the security of applications before installing them. Applications are installed at your own risk. The terminal may get infected with a virus and all data on the terminal may be damaged.
- NTT DOCOMO shall not accept liability for any malfunctions caused by the applications that you have installed. If a malfunction results, repair will be at cost, even if within the warranty period.
- NTT DOCOMO shall not accept liability for any disadvantage to you or a third party caused by the applications that you have installed.
- Some applications connect to the Internet and carry out communication automatically. Note that you may incur costly packet transmission charges.
- If you need more information about Android Market, from the market screen, ≡ ▶ tap "Help".

Installing applications

1 Search for an application from the market screen

2 Tap the application you want to install

- Carefully check the displayed content and follow onscreen instructions.

- By installing an application, you accept responsibility for using the application on the terminal. Use particular care with applications that access a large number of functions or large amounts of data.

NOTE

- To stop download, open the Notifications panel, tap the application, and then tap ×.

Purchasing applications

Fee-based applications must be purchased before download.

- You only make payment once for an application.
  Once you have downloaded an application, you do not need to make payment each time you uninstall or redownload it.

1 From the market screen, search for an application

2 Tap the application you want to purchase

3 Tap the monetary amount box

- Carefully check the displayed content and follow onscreen instructions.
- By purchasing an application, you accept responsibility for using the application on the terminal. Use particular care with applications that access a large number of functions or large amounts of data.
- Tap the links for the displayed important notices including "Refund Policy" and "Google billing and privacy policy" and check their content.

■Requesting refund

You can request a refund within a stipulated time after purchase. The application will be deleted, and you will not be charged for it.
You may obtain only one refund for each application. If you have previously requested and obtained a refund for a purchased application, you cannot obtain another refund for that same application after you purchase it again.
For information on payment methods and refund terms, from the market screen, ≡ ▶ "Help" ▶ "Andoid Apps", see each item for "Buying apps".

NOTE

- Customers using sp-mode can also make payment together with their monthly terminal fees (Content Payment Service). For details, refer to the NTT DOCOMO website.
- For an initial purchase by credit card, you must enter information for the credit card you use for Google Checkout. Google Checkout is a fast, secure, and convenient method for purchasing applications from the terminal. For more information on Google Checkout, refer to "http://checkout.google.com/".
  Your Google Checkout information will be stored on the terminal. Set the screen lock to ensure the security of the terminal. → P.110

Deleting applications

1 In the market screen, ☰ "My Apps"

2 Tap the application you want to delete

3 "Uninstall" ▶ "OK"

- For fee-based applications, an "Uninstall & Refund" screen appears.

GPS

You can use the terminal's GPS function and compatible software to check your present location, find directions to a destination, etc.

- DOCOMO shall not accept liability for any damage caused by a malfunction of the GPS system.
- DOCOMO shall not accept liability for any purely economic damages caused by missed opportunities to check the measurement (communication) results due to external factors, such as a failure or malfunction of the terminal, or a power failure (including the battery running down).
- You cannot use the terminal as a navigation device for an aircraft, vehicle or person. DOCOMO shall therefore not accept any liability for damages caused by navigation using the location information.
- You cannot use the terminal as a high-accuracy measurement GPS. DOCOMO shall therefore accept no liability for damages caused by measurement error.
- GPS is operated by the U.S. Department of Defense. GPS signals are subject to control adjustments (reduced accuracy, stoppage of signal, etc.) at the discretion of the Department.
- Some wireless communications products (mobile phones, data detectors, etc.) block satellite signals and cause instability of signal reception.
- The display of some maps based on location information (latitude/longitude information) may be inaccurate due to the regulations of some countries or regions.
- You may find it impossible or difficult to receive the GPS signal in the following conditions because GPS uses radio waves from a satellite.
  - Inside or immediately underneath a building
  - In a basement or tunnel, underground, or underwater
  - In a bag or box
  - In a built-up or residential area
  - In or under thick trees
  - Near a high-voltage cable
  - Inside cars or trains
  - In heavy rain, snow, or other bad weather

- When there are obstructions (people or objects) near the terminal
- When the GPS antenna section of the terminal is covered with a hand

Enabling the Location Service

To use the Location Service, you must enable the GPS function beforehand. You can also configure the terminal to find approximate location information based on information from Wi-Fi and mobile network base stations.

Enabling the GPS function

1 From the Home screen, ☰ ▶ "Settings" ▶ "Location & security"

2 Mark the "Use GPS satellites" checkbox ▶"Agree"

Enabling search of current location by wireless network

1 From the Home screen, ☰ ▶ "Settings" ▶ "Location & security"

2 Mark the "Use wireless networks" checkbox ▶ "Agree"

NOTE

- By agreeing, Google Location Service gathers location information in a manner not enabling pinpointing of individuals. Gathering of location information occurs regardless of whether an application is launched.

Using Google Maps

You can use Google Maps display your current location, search other locations, search directions, etc.

- To use Google Maps, a 3G/GPRS or Wi-Fi connection enabling data communication is required.
- Set the Location Service on beforehand. → P.147
- Google Maps does not cover all countries and cities.

1 From the application list screen, "Maps"

- The first time you launch this application, a screen presenting new map features appears. Tap "OK". To improve current location function, tap "Settings".

■Zooming in/out on the map

- Zoom in : Tap [+], slide two of your fingers apart, and then double-tap (tap twice)
- Zoom out : Tap [−], slide two of your fingers together, and then tap with your two fingers

■Displaying current location

▶ "◎"

■Searching a location

▶ "Search Maps" ▶ enter a location to search ▶ "実行" (execute) or tap a search candidate

- You can tap a balloon to check details.

■Viewing Street View

▶ Touch and hold a point you want to view in Street View ▶ tap a balloon ▶ "🚶"

- Some regions are not supported for Street View.

■Displaying layers

- You can display information such as traffic conditions overlaid on a map, or switch to an aerial photograph.

▶ "≡" ▶ tap the item you want to view

- Traffic conditions and railway lines are provided for limited regions.

■Clearing a map

- Clear all displayed layers and directions search results.

▶ "≡" ▶ "Clear Map"

Looking up directions

You can view directions to the arriving point.

1 While viewing a map, [≡] ▶ "Directions"

2 Enter the starting point in the textbox above

3 Enter the arriving point in the textbox below

- You can tap 📖 and specify a Phonebook address, a map location, etc.

4 Tap the means ((car)/ (public transport)/ (on foot)) ▶ "Get directions"

- When several sets of directions are found, tap the desired directions.

Using Navigation

You can use audio guidance to the destination.

1 From the application list screen, "Navigation"

- The first time you launch this application, a description of Google Maps Navigation is displayed. Tap "Accept".

2 Select any item:

Speak Destination……Enter your destination by voice.

Type Destination……Enter your destination by text entry.

Contacts……Enter your destination from an address registered in your Phonebook.

Starred Places……Enter your destination from a location with a star added in Google Maps.

- Navigation starts.

■Exiting navigation

▶ [≡] ▶ "Exit Navigation"

NOTE

- If driving a car, be sure someone other than the driver operates the navigation.

Using Places

You can search for shops and facilities near your current location and display information. Shops and other locations that were found can be displayed in the Google Maps screen.

1 From the application list screen, "Places"

2 Tap the facility, etc. you want to find

- A list of search results is displayed.

3 Tap the desired facility, etc.

- Detailed information is displayed.

Using Latitude

Launch Google Latitude™ to display the shared screen of the current location and register the contact address and mail address of your friend. After registration, you and your friends to check each others' locations on maps and share status messages with each other. It also enables you to send email and SMS messages, make calls and search for directions to friends' locations.

- Location information is not shared automatically. You must first join Latitude and then invite friends to provide their locations, or accept invitations from friends to share your location.

1 From the application list screen, "Latitude"

- For more information on Latitude, use the following to refer to mobile Help. From the Latitude screen, [≡] ▶ "Map view" ▶ [≡] ▶ "Help" ▶ "How to" ▶ "Latitude"

1Seg

1Seg is a terrestrial digital TV broadcasting service for mobile devices and enables these devices to receive data broadcasts in addition to video and audio broadcasts. It allows users to obtain more detailed information about TV programs and to readily participate in quiz shows and enjoy TV shopping and other contents.
For details on the 1Seg service, refer to the following website:
The Association for Promotion of Digital Broadcasting
http://www.dpa.or.jp/english/

■Notes on the use of 1Seg

- The 1Seg service is provided by TV broadcasters and other organizations. You will not be charged for the video and audio content you receive. For information about the viewing fees charged by NHK, please contact the broadcaster.
- The data broadcast area displays two types of information: "Data broadcast" and "Data broadcast website".
  A "Data broadcast" is brought by airwaves, together with video and audio, and a "Data broadcast website" is displayed by the mobile device connecting to a website prepared by a TV broadcaster or other organization.
  Packet communication charges are incurred for viewing a "Data broadcast website" or other website. Some websites may charge you for the information they provide.

■Airwaves

1Seg is a broadcasting service that operates on radio waves (airwaves) different from those for the FOMA service. Therefore, you cannot receive the 1Seg service in locations that airwaves cannot reach or during hours when program is not available, regardless of whether you are outside or inside the FOMA service area.
Even in areas where the terrestrial digital TV broadcasting service is available, you may have poor or no reception in the following places:

- Place far away from a tower that transmits airwaves
- Place in a mountain area or behind a building where radio waves are blocked by land or structural features
- Inside a tunnel, underground, inner area of a building or other place where radio waves are weak or nonexistent

To get good reception, fully extend the antenna for the 1Seg service. Changing the orientation of the antenna, or moving to another location may result in better reception.

■1Seg antenna

- When changing 1Seg antenna direction, do not apply excessive force.

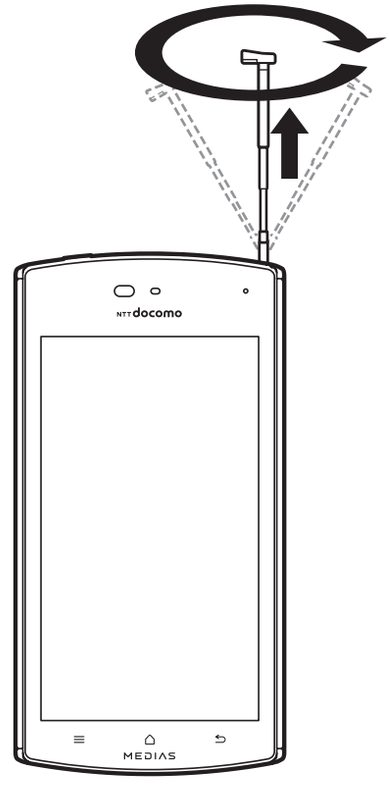

NOTE

- To stow the 1Seg antenna, hold it at its base and push it in as far as it will go.

Viewing 1Seg

1 From the application list screen, "TV"

- The first time you launch 1Seg, you are required to set channels. → P.151

■Adjusting the volume

▶ Press the volume key

Setting channels

1 From the 1Seg viewing screen, ☰ ▶ "Settings" ▶ "Change area"

2 "Empty" ▶ "Auto"

- Scan channels and register channel information.
- Select a registered area to switch to that area and view 1Seg.

■Setting channels manually

▶ "Area Select" ▶ tap the region, prefecture, and locality successively for the area

Viewing the 1Seg viewing screen

Change to vertical display to display data broadcast.

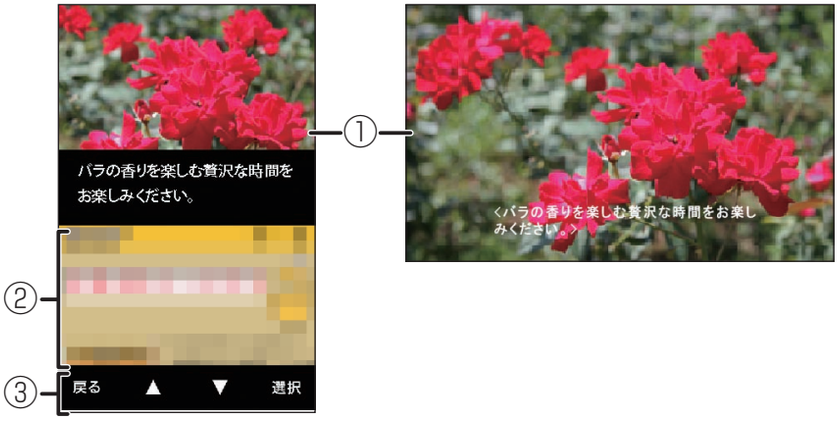

①TV picture area

- Flick left/right to select a channel
- Touch and hold to display the channel list

②Data broadcast area

③Controls

■Controls when TV image area tapped

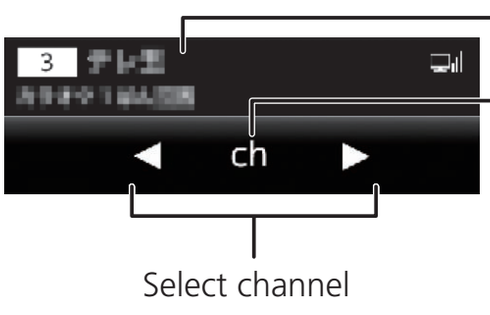

■Controls when data broadcast area tapped

Using the program guide

You can browse a program guide for terrestrial digital TV and BS digital broadcasting. Search for programs by keyword, genre, etc., and book programs for viewing.

1 In the 1Seg viewing screen, ☰ ▶ "Program guide"

- The first time you launch the program guide, agree to terms of usage, and a regional setting screen appears.

Choosing a program to view

1 Tap a program you want to view on the program guide ▶ "ワンセグ" (1Seg) ▶ "ワンセグ起動" (Launch 1Seg)

Booking viewing

Book programs for 1Seg viewing. An alarm sounds at the time you set for the start of a program.

1 Tap a program on the program guide ▶ "ワンセグ" (1Seg) ▶ "ワンセグ視聴予約" (Book 1Seg viewing)

2 Check each item ▶ "Save" ▶ "YES"

Using a TV link

Depending on the data broadcast, link information to related sites (TV links) are displayed, and can be added to allow you to connect to related sites later.

- To add TV links, tap an item that allows TV links in the data broadcast area.

1 In the 1Seg viewing screen, ☰ ▶ "TV Link"

2 Tap a link ▶ "YES"

■Deleting a TV link

▶ Touch and hold the TV link you want to delete ▶ "Delete" ▶ "Delete one"/"Delete all" ▶ "YES"

Configuring 1Seg settings

1 In the 1Seg viewing screen, ☰ ▶ "Settings"

2 Select any item:

Data Broadcasting settings……Configure data broadcasting settings.

Confirm connection……Set a confirmation message to appear before carrying out communication.

Use location info……Set to use location information.

Use phone info……Set to use the terminal information.

Delete station data……Delete stations from memory.

Sleep Timer……Set the time until 1Seg automatically ends.

Subtitle/Sound……Set subtitles and audio.

Change area……"Setting channels" →P.151

Product Information……Display product information.

Osaifu-Keitai

The Osaifu-Keitai function allows you to make payments, use coupons, participate in stamp rallies, etc. simply by waving the terminal, equipped with an IC card, over the reader in the store. In addition, by waving the terminal over the reader, you can access websites, obtain the latest coupons, receive electronic money and check the usage status of electronic money by data communication. Also, you can lock the Osaifu-Keitai function for security in case you lose the terminal.

- For details on Osaifu-Keitai, see "ご利用ガイドブック (spモード編)" (Mobile Phone User's Guide [sp-mode], in Japanese only) and dmarket.
- To use the Osaifu-Keitai service, you need to make settings on the relevant website or by using the relevant application.
- A fault in the terminal may cause the data stored in the IC card (including electronic money and earned points) to be lost or changed. Before submitting the terminal for repair, you should in principle delete all data from the terminal by yourself; the terminal will not be accepted if it contains any data.
  For information about data reissuance, restoration, temporary storage, transfer and other forms of support, excluding transfer by iC transfer Service, check with your Osaifu-Keitai service provider. You are advised to use an Osaifu-Keitai service with a backup service for important data.
- NTT DOCOMO shall not accept liability for any damages arising in relation to the Osaifu-Keitai service, including the loss or change of the IC card data, in any events including failures and phone model changes.
- If you have the terminal stolen or lost, contact your Osaifu-Keitai service provider immediately for information about necessary action.

iC transfer service

Allows you to transfer all Osaifu-Keitai data on an IC card to a replacement Osaifu-Keitai in such instances as when changing to a new terminal or submitting the terminal for repair.

Visit your nearest docomo Shop to receive iC transfer Service. For details on iC transfer Service, refer to "ご利用ガイドブック (spモード編) " (Mobile Phone User's Guide [sp-mode], in Japanese only).

Using the Osaifu-Keitai

To use an Osaifu-Keitai service, download an Osaifu-Keitai application from an Osaifu-Keitai website and then make necessary settings. Some Osaifu-Keitai services may not require downloading an Osaifu-Keitai application.

1 From the application list screen, "Osaifu-Keitai"

- If initial settings have not been completed, the initialization screen appears.

2 Tap the service you want to use

3 Make the settings related to the service

- Make necessary settings from the service website or application.

Holding the terminal over a reader

You can hold the) up to a reader to enable an electronic transaction.

- The notification LED lights (blue) when you are using Osaifu-Keitai.

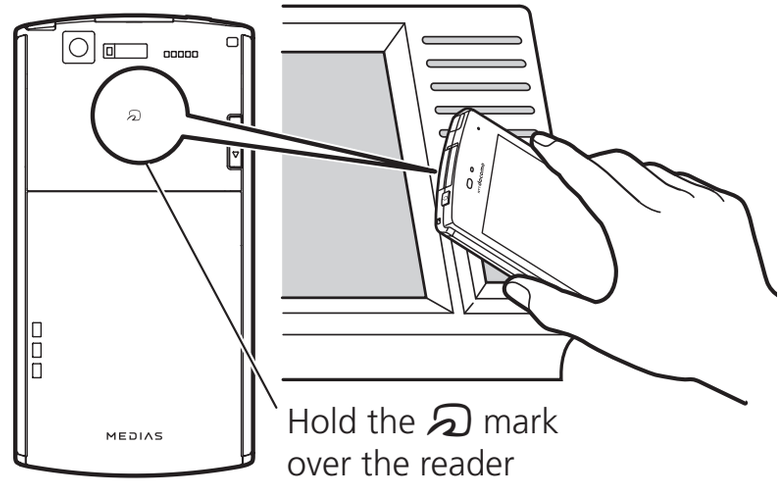

Hold the) mark over the reader

- Note the following when holding the terminal up to a reader.
  - Do not strike the terminal against the reader
  - Hold the) mark evenly with the reader
  - Hold the) mark at the middle of the reader as much as possible
  - If unreadable by the reader, move the) mark above/below, to the left/right of the reader
  - Do not attach anything metal on the side of the terminal with the) mark

Locking Osaifu-Keitai

Lock Osaifu-Keitai to prevent it from being used by another person without permission.

- The Osaifu-Keitai function is not unlocked even if you turn off the power of the terminal.
- This function is enabled when "Set up (Change) unlock security" is any setting other than "None".
- To set this function/unlock, you must enter the unlock security code you set with "Set up (Change) unlock security".

1 From the application list screen, "Osaifu-Keitai"

2 ☰ ▶ "Osaifu-Keitai Lock Setting"

3 Select any item:

OFF……Unlock Osaifu-Keitai.

ON……Set the operation of "Osaifu-Keitai Lock Setting".

Work with screen lock……Set to lock together with the screen lock. Unlocking the screen also unlocks Osaifu-Keitai.

Turning ON always ……The lock always activates. To cancel locking, set "Osaifu-Keitai Lock Setting" to "OFF".

ToruCa

ToruCa is an electronic card that can be imported into the terminal. Available from a reader or online, it provides shopping information or serves as a coupon. The imported ToruCa is saved in the "ToruCa" application that allows you to view, find or update a ToruCa.

- For details on ToruCa, see "ご利用ガイドブック (spモード編)" (Mobile Phone User's Guide [sp-mode], in Japanese only) and dmarket.

1 From the application list screen, "ToruCa"

NOTE

- Packet communication charges may be incurred when you import, view or update a ToruCa.
- You may not be able to import, view or update a ToruCa that has been provided for an i-mode terminal.
- Depending on the settings by the IP (Information Provider), the following functions may not be available:
  - Import from a reader
  - Update
  - ToruCa sharing
  - Transfer or copy to a microSD card
  - Map display
- Depending on the IP settings, you may not be able to display a map from a ToruCa list, even if the ToruCa (details) supports map display.

NOTE

- When the Osaifu-Keitai is locked, a ToruCa cannot be imported from a reader.
- When the duplicate check is set to "ON" you cannot import an identical ToruCa more than once. To import an identical ToruCa more than once, set the check to "OFF".
- When sending a ToruCa by email, it is sent in its pre-import state.
- You may not be able to save a ToruCa that has been emailed to you, depending on the email application that you are using.
- Depending on the type of the browser, you may not be able to import a ToruCa via it.
- When moving or copying a ToruCa to a microSD card, it is moved or copied in its pre-import state.
- When the initial setup of the Osaifu-Keitai has not been performed, a ToruCa cannot be imported from a reader.

Clock

1 From the application list screen, "Clock"

NOTE

- Tap to switch the backlight on/off.
- Tap to view the photos stored on the microSD card in a slideshow. Tap [⮌] to stop the slideshow.
- Tap to start the "Media Player" (P.142) or "Music" application and play music.

Setting the alarm

1 While the clock is displayed, " "

- [≡] ▶ from "Settings", you can set "Alarm in silent mode", "Alarm volume", "Snooze duration", and "Volume key behavior".

2 "Add alarm"

3 Set the alarm time ▶ "Set"

4 Select any item:

Turn alarm on……Set the alarm to operate.

Time……Set the alarm time.

Repeat……Set the alarm to sound at the same time on each day.

Ringtone……Set the alarm sound.

Vibrate……Set the terminal to vibrate together with the alarm.

Label……Assign a label to the set alarm.

- When the alarm sounds, tap "Dismiss" to stop the alarm. By tapping "Snooze", the alarm sounds again according to the "Snooze duration" setting.

5 "Done"

Calendar

You can manage your schedule by synchronizing the terminal calendar with an online calendar provided by Google or other service.

- You must configure a Google account beforehand. → P.62

1 From the application list screen, "Calendar"

■Switching the calendar display

▶ ☰ ▶ "Day"/"Week"/"Month"

Creating a schedule

1 While viewing the calendar, touch and hold the day to enter an event in ▶ "New event"

2 Set each item ▶ "Done"

NOTE

- 1 appears in the status bar when the set time arrives. You can open the Notifications panel and check the details. Tap "Dismiss all" to clear all notifications, and tap "Snooze all" for the notifications to appear again in 5 minutes.

Checking the agenda

1 While viewing the calendar, ☰ ▶ "Agenda"

■Changing/deleting events

▶ Tap an event you want to change/delete ▶ [≡] ▶ "Edit event"/"Delete event"

Changing calendar settings

1 While viewing the calendar, [≡] ▶ "More"

2 "Settings" ▶ change settings as needed

- You can set the schedule's notification method, ringtone/vibration selection, and the reminder's prior notification.

■Synchronizing with Google Calendar™ or other data

▶ "Calendars" ▶ tap the account of the calendar to display, and then set to "synced, visible" ▶ "OK"

Schedule

1 From the application list screen, "Schedule"

- The schedule screen appears.

Adding events

1 From the schedule screen, tap a date you want to add an event to ▶ "新規作成" (New) ▶ enter items ▶ "Save"

Checking your schedule

1 From the schedule screen, tap the date you want to check

- Added events are displayed below the calendar. Tap an event to view details.
- Touch and hold an added event to edit/delete/etc.

■Checking your schedule in the Memo list screen

- You can check information for added events with "Memo".

▶ [≡] ▶ "To memo list" ▶ check events in the Memo list screen (P.159)

■Configuring schedule settings

- Set an alarm, change your account, etc.

▶ [≡] ▶ "More" ▶ "Settings"

Memo

1 From the application list screen, "Memo"

- The Memo list screen appears.
- Tap added information to view details.
- Touch and hold added information to edit, delete, or prioritize it.

■Adding a new memo

▶ "新規作成" (New) ▶ enter items ▶ "Save"

■Checking memos in the schedule screen

- You can check memos with "ToDo" and "いつ？" (When?) information with "Schedule".

▶ [≡] ▶ "To schedule" ▶ check memo in the schedule screen (P.158)

Calculator

1 From the application list screen, "Calculator"

- Flick to left/right to switch between functions and +/-/×/÷.
- You can touch and hold the formula box to copy/paste a formula.
- Tap "CLEAR" to delete entered digits and operators, or touch and hold to delete all of a formula.
- You can tap [^] and [v] to display the formula history.

Quickoffice

You can view and edit documents that have been saved on the microSD card. The following files are supported.

- Excel (Excel 97 to Excel 2010): xls, xlsm, xla, xlam, xlt, xltm, xlsx, xltx
- Word (Word 97 to Word 2010): doc, docx, docm, dot, dotx, dotm
- PowerPoint (PowerPoint 97 to PowerPoint 2010): ppt, pptx, pot, pptm, ppsm, potx, potm, pps, ppsx
- Adobe Acrobat (Acrobat 5 to 9)*: pdf
- Text: txt

* Uneditable

1 From the application list screen, "Quickoffice"

- The first time you launch the software, registration screen appears.

iD設定アプリ (iD appli)

"iD" is convenient e-money that uses a credit system. You can shop easily and conveniently by simply waving an Osaifu-Keitai or an iD-enabled card with credit card information over the reader unit.
You can register up to two credit cards on an Osaifu-Keitai. This allows you to use your credit cards appropriately for giveaways, etc.
Depending on the credit card issuer, you can withdraw cash.

- If using iD with an Osaifu-Keitai, you will need to apply to a credit card issuer compatible with iD, as well as make configurations with iD appli.
- Expenses (annual fees etc.) for using iD services differ by the credit card issuer.
- Overseas usage charges for packet communication are different from those in Japan.
- For more information on iD, see the iD site (http://id-credit.com/) (Japanese).

1 From the application list screen, "iD設定アプリ" (iD appli)

Overview of International Roaming (WORLD WING)

The WORLD WING international roaming service allows you to use the same domestic phone number and email address in the service areas of overseas operators affiliated with DOCOMO. You can use the call and SMS functions without changing settings.

■Available areas

The terminal can be used in 3G network and GSM/GPRS network service areas, as well as in countries and areas supporting 3G850MHz/GSM850MHz network. Please check the available areas.

- Before usage overseas, see the following items.
  - "Mobile Phone User's Guide [International Services]"
  - DOCOMO "International Services website"

NOTE

- For a country code, international call access code, universal number international prefix, and information about countries, regions, overseas operators that you can access, see "Mobile Phone User's Guide [International Services]" or the DOCOMO "International Services website".

Services Available Overseas

Communication service	3G	GSM/ GPRS	GSM
Calling	○	○	○
SMS	○	○	○
Email*1	○	○	×
Browser *1	○	○	×
GPS location verification*2	○	○	×

(○: Available ×: Not available)

*1 Turn on the data roaming setting to perform data communication when roaming.
→ P.164

*2 Packet communication charges are incurred during GPS measurement (finding current location).

NOTE

- Some services are not available depending on the overseas operator or network being used. For information about overseas operators that you can access, see "Mobile Phone User's Guide [International Services]" or the DOCOMO "International Services website".

Check Before Using the Terminal Overseas

Checks to do before departure

Before use overseas, check the following while you are still in Japan.

■Your contract

Check whether you have applied for WORLD WING. For more details, contact "General Inquiries" at the last page of this manual.

■Battery charging

For charging with an AC adapter overseas, use a separately available "FOMA AC Adapter 01 for Global use", "FOMA AC Adapter 02" or "AC Adapter 03".

■Charges

- Overseas usage charges (call and packet communication) are different from those in Japan.
- Some applications make communications automatically and may incur high communication charges.
  Please confirm the application's behavior with its developers.

Preliminary Settings

■About network services

If you are subscribed to the network services, you can operate the Voice mail service, Call forwarding service, and Caller ID display request service overseas. However, some network services are unavailable.

- To use network services overseas, you must set "Remote operation settings" (P.91) to "Activate service". You can also set "Remote operation settings" once reaching your destination.
  From the Home screen, ≡ ▶ "Settings" ▶ "Call settings" ▶ "Roaming settings" ▶ "Network service" ▶ "Remote operation (charged)"
  For more information, see "Mobile Phone User's Guide [International Services]".
- The network services, even if they can be set on/off, may not be available depending on the overseas operator you connect.

Checks to do in the country you stay

When you arrive overseas, the terminal automatically connects to an available network operator when it is powered on.

■About connections

The terminal automatically selects the optimal network when you enable "Select automatically" for "Network operators" in the "Mobile networks" setting.

You can use packet communication service overseas at daily capped pricing by manually connecting to the operator providing desired service in "Network operators". To use the flat-rate pricing service, you are required to subscribe to it. For details, see "Mobile Phone User's Guide [International Services]" or the DOCOMO "International Services website".

■About screen display

The type of network you are using is indicated in the status bar on the screen.

: Roaming

/ : GPRS communicating / available

/ : 3G communicating / available

- The network operator you are connecting is shown on Notifications panel.

■The date and time

If the date and time are configured to update automatically, the time and time zone of the terminal's clock will be automatically changed when information about the local time and time zone is received from the network of the overseas operator to which you are connected.
→ P.117

- The date and time setting may not work properly depending on the network of the overseas operator. Set manually in such a case.
- The timing of these changes varies depending on the overseas operator.

■Inquiries

- If the terminal or miniUIM is lost or stolen overseas, contact DOCOMO immediately from your current location and carry out the procedure to suspend usage. For contact information, refer to the last page of this manual. Please note that you are liable for any call or communication charges incurred after the loss or theft of the terminal.
- You will need the country's international call access code or universal number international prefix if calling from a land-line phone from overseas.

After returning to Japan

When you return to Japan, the terminal automatically connects to the DOCOMO network. If it is unable to connect, change the following settings.

- Set "Network Mode" to "Auto". → P.164
- In the settings of "Network operators", set "Available networks" to "Select automatically". → P.164

Network Settings for Use Overseas

The terminal is configured to automatically detect and switch the network mode, operator, etc. by default, but you can also manually switch.

1 **From the Home screen, ☰ ▶ "Settings" ▶ "Wireless & networks" ▶ "Mobile networks"**

■Configuring Network Mode

▶ "Network Mode" ▶ tap the network mode you want to use

■Setting an operator

▶ "Network operators" ▶ "Select automatically" or tap the network of the operator you want to use

- The operator names that are displayed may vary depending on the setting of the "Network Mode".

■Enabling data roaming

▶ Mark the "Data roaming" checkbox ▶ "OK"

Making/Receiving Calls while at Destination

Making calls to other countries (including Japan) while overseas

You can use the international roaming service to make calls to other countries while overseas.

1 **From the application list screen, "Phone"**

2 **"Dial"**

3 **Enter + (touch and hold "0") ▶ country code ▶ area code (city code) ▶ enter the number**

- If the area code (city code) begins with "0", omit "0".
  You may need to dial "0" at the beginning of the number for calls to some countries and regions, such as Italy.

4 " "

Using international dial assist

You can easily make an international call to a country registered with "International dial assist", when calling from your destination to another country, using the international roaming service.

- You must set "International dial assist" beforehand. → P.165
- Only enabled when a number begins with "0".

1 From the application list screen, "Phone"

2 "Dial" ▶ enter the number ▶ "[ ]"

3 "Converted number"

- "+" and "Country code" are added and the international call is made.

■Configuring international dial assist

1 From the Home screen, [≡] ▶ "Settings" ▶ "Call settings" ▶ "Roaming settings" ▶ "International dial assist"

2 Select any item:

Automatic conversion function……Set whether to make an international call using the international dial assist setting.

Country code……Register the country/region name and country code used when using the international dial assist setting.

International prefix……Register the international prefix to use with international dial assist.

Making domestic calls while overseas

Dial the other party's land-line phone number or mobile phone number in the same way as in Japan. → P.84

Making calls to WORLD WING users overseas

When the other party that you are calling is a WORLD WING user, make an international call to Japan, even if the other party is in the country in which you are staying.

- Dial "+" and "81" (country code of Japan) first and then dial the mobile phone number omitting the "0" at the beginning, as when you make an international call to Japan, because the call is routed through Japan regardless of where the other party is.

Receiving calls while overseas

You can receive calls overseas in the same way as when in Japan.

NOTE

- When you receive a call while using the international roaming service, the call is forwarded internationally from Japan, regardless of the country from which the call is made. The caller incurs call charges for the call to Japan, and the receiver incurs incoming call charges.

Procedure for the other party to make a call to you

■Having the other party call you overseas from Japan

Have the other party call you simply by dialing your number in the same way as when you are in Japan.

■Having the other party call you overseas from outside Japan

You need to have the other party dial the international access code + "81" (Japan country code) regardless of the destination.

International access code-81-90 (or 80) -xxxx-xxxx

Configuring settings for international roaming

● You might not be able to configure settings depending on the overseas operator.

1 From the Home screen, [≡] ▶ "Settings" ▶ "Call settings" ▶ "Roaming settings"

2 Select any item:

Restricting incoming calls……Restrict calls from arriving overseas.

Incoming notification while roaming……SMS notifies you of missed calls overseas.

Roaming guidance……Informs callers that you are overseas.

International dial assist → P.165

Network service ……Set the network service such as Voice mail service from overseas. Note the following when making the setting.

- You need to set the remote operation to Start.
- If you operate a phone from overseas, you will be charged for a call to Japan in the country used.
- Some overseas carriers may not allow you to make the setting.

When you select the following services, you will receive a message. You can set information according to the voice guidance.

- Remote operation (charged)
- Caller ID notification request service (charged)
- Roaming call notification (charged)
- Roaming guidance (charged)
- Voice mail (charged)
- Call forwarding (charged)

Introduction to Options and Related Devices

You can expand the range of the terminal's uses, in both the personal and business realms, by combining it with various optional devices. Some products may not be available in certain areas.
For more details, please contact a service counter such as a docomo Shop.
For details on optional devices, see the related instruction manuals.

- Battery Pack N32
- Back Cover N59
- Desktop Holder N38
- FOMA microUSB Adapter N01 for charging
- FOMA AC Adapter 01*/02*
- AC Adapter 03
- FOMA AC Adapter 01 for Global use*
- AC Adapter Converter Plug TypeC 01
- Carry Case 02
- FOMA DC Adapter 01*/02*
- DC Adapter 03
- Wireless Earphone Set 02
- Wireless Earphone Set P01
- Earphone/Microphone 02
- Stereo Earphone/Microphone 02
- Earphone Adapter 02
- Drive Net Cradle 01
- Bluetooth Headset F01
- AC Adapter F01 for Bluetooth Headset
- FOMA Portable Charging Adapter 02*
- FOMA Dry Battery Adapter 01*
- microUSB connection cable 01
- Bone Conduction Microphone/Receiver 02
- Pocket Charger 01/02

* FOMA microUSB Adapter N01 for charging is required.

Sample (microUSB cable for PC connection)

microUSB cable for PC connection

● This cable enables the terminal to charge without terminating the data communication.

■Installation

Installation and charging → P.52

* Do not connect the terminal with PC using the microUSB cable for PC connection in the area where use is prohibited.

■Cable Length

- Approx. 50cm

Troubleshooting (FAQs)

Troubleshooting

- First, check whether a software update is required. If required, update the software. → P.179
- If a symptom does not improve after its cause has been identified, contact "Repairs" (in Japanese only) at the last page of this manual or a repair counter specified by DOCOMO.

■Power supply

Power does not turn ON.	
● Is the battery pack inserted correctly?	P.47
● Is the battery pack charged?	P.49

■Charging

Cannot charge (Notification LED does not light or blinks).	
● Is the battery pack inserted correctly?	P.47
● Is the adapter power plug securely connected to an electric outlet?	P.51
● If you are using the FOMA microUSB Adapter N01 for charging and the AC adapter (optional), is the FOMA microUSB Adapter N01 for charging correctly connected to the AC adapter and to the terminal? Also, if you are using provided desktop holder, is the provided desktop holder securely connected to the AC adapter?	P.50, 51
● If you are using provided desktop holder, check if the charging terminal is dirty. If so, wipe the terminal part with a dry cotton swab.	P.50
● If you are using a microUSB cable for PC connection (sample), is the PC powered on?	P.52
● If using the microUSB cable for PC connection (sample), remove any other USB devices.	P.52
● If using the microUSB cable for PC connection (sample), connect it directly to the USB port of a PC that is receiving power.	P.52

● If using the microUSB cable for PC connection (sample), has the terminal battery depleted? Connect after charging for approx. 5 minutes with an AC adapter.	P.52
● If using the microUSB cable for PC connection (sample), is the connector on the PC side and the connector on the terminal side securely connected?	P.52
● If you make a call, perform data communication, or use some other function for a long time while charging, the terminal may become hot and charging may be stopped. In this case, charge again after the terminal cools down.	-

■Operation of the terminal

Becomes hot during operations or charging.	
● The terminal, battery pack, or adapter may become hot during operations or charging, or if you use the camera function or view 1Seg for a long time while charging. This is not a safety hazard, so you can continue to use them.	-
● If you use the camera function or view 1Seg for a long time, the terminal may become hot and the camera function or 1Seg may end. Wait a while before restarting to use the camera function or 1Seg.	-
Battery usage time is short.	
● Has the terminal been out of the network service area for a long time? As the terminal searches for radio waves in order to enable communication when out of the network service area, more electricity is consumed than usual.	-
● The battery pack usage time varies depending on the usage conditions and the degradation level.	P.49

● The battery pack is a consumable. The available usage time shortens every time the battery pack is recharged. If the usage time significantly reduces compared to the time of purchase even if the battery pack is fully charged, purchase the specified battery pack.	P.50
Power turns off or automatic restart occurs.	
● If the battery pack terminal is dirty, the contact may become poor and the power may be turned off. If dirty, wipe the battery pack terminals with, for example, a dry cotton swab.	-
No operation occurs by tapping or pressing a key.	
● Is the terminal turned off?	P.54
● Are you touching the touch panel correctly?	P.55
● Is the screen locked?	P.54
● Is the terminal in sleep mode? Press the power key to cancel sleep mode.	P.54
Tapping does not work properly.	
● Do you tap the screen with gloved hands?	P.55
● Do you tap with the tip of a fingernail, or is there any foreign matter between your hand and the screen?	P.55
● Is the display covered with a protective sheet? Some types of protective sheets prevent correct operation.	P.55
Screen response to tapping or key press is slow.	
● The screen response may slow down if large amounts of data are saved in the terminal or transferred between the terminal and the microSD card.	-
● Is the proximity sensor blocked by your fingers or a seal? Enabling "Touch panel sensitivity" of the touch panel setting will have no effect in this case.	P.109
The miniUIM is not recognized.	
● Is the miniUIM inserted in the right direction?	P.44
The clock shows wrong time.	
● If power is kept on for a prolonged time, the clock may show the wrong time. Check that the date and time are set to "Automatic", and turn the terminal off then back on in a location with good signal reception.	P.117

Operation of the terminal is unstable.	
● May be due to an application installed after purchasing the terminal. If operation improves after launching in safe mode, operation can sometimes then be improved by uninstalling an installed application. * Safe mode applications to be launched in a state close to that of time of purchase.	-

■Launching safe mode

With power off, turn power on and between the time after the screen bearing the "docomo with series" notice has faded and when the Home screen appears, touch and hold [≡] until safe mode is entered.

* Depending on conditions of usage, when to press [≡] may change.
* "Safe mode" appears at lower left when safe mode is launched.
* To end safe mode, turn power off and then back on.
  - Back up important data beforehand before using safe mode.
  - Widgets that you have created yourself may be erased.
  - Since safe mode is not a normally launch state, end safe mode to enable normal use.

The character entry field disappears on the horizontal display during character entry.	
● Have you set "Key size" and "Font size" to larger values? Adjust them by setting smaller values.	P.71
● Have you unchecked "Auto full screen (horizontal)"? Check it to display the character entry field.	P.70
The application does not start. The data is corrupt.	
● You might have attached/removed the battery pack without turning off the power. Uninstall the application and reinstall it or perform "Factory data reset".	P.114

■Telephone call

The ringtone does not sound.	
● Is the terminal in Silent mode?	P.108
● Is the ring time for the Voice mail service or Call forwarding service set to "0 sec."?	P.94, 95
● Is the ringtone volume set to its minimum?	P.108
● If you cover the proximity sensor with your hand, the ringtone volume may be lower.	P.43
Cannot make a call with shown.	
● Are you out of the service area or in a place with poor signal strength?	P.63
Cannot make a call (does not disappear when you move, or calls cannot be made or received even when the radio wave is strong enough).	
● Turn the power off and then on, or remove and reinsert the battery pack or miniUIM.	-
● You may not be able to make or receive calls, depending on the type of radio signal, even when is shown. Move to another place and call again.	-
● Depending on how congested the radio waves are, it may be difficult to establish a connection in crowded places due to a congestion of calls and emails.	-

During a call, etc. is not displayed/During a call, nothing is displayed.	
● If etc. is not displayed even after quitting sleep mode, the proximity sensor may be covered with a protective sheet. Do not cover the proximity sensor. You can display etc. by tapping [≡] or [↩] or other similar method.	P.43

■Screen

The display is dim.	
● Has the time set with "Screen timeout" elapsed?	P.109
● Is the terminal in eco mode?	P.109
● Has "Brightness" setting changed?	P.108
● Is battery level low?	P.109

■Sound

During a voice call, the other party's voice is difficult to hear or is too loud.	
● Has the call volume been changed?	P.86
● Is the earpiece covered with a protective sheet?	P.43
● Is the earpiece held correctly to your ear?	P.43
The other party cannot hear / has difficulty hearing me.	
● Is the mouthpiece covered with a protective sheet?	P.43
● Is the mouthpiece held correctly to your mouth?	P.43

■Camera

Photos and videos shot with the camera are blurred.	
● Check whether the lens is cloudy or has dirt on it.	-
● Is image stabilization set to "OFF"?	P.139, 140
● Is auto focus set to "AF OFF"?	P.139, 140
● When shooting a person, switch auto focus to "Face detection AF".	P.139

■1Seg

Cannot view 1Seg.	
● Are you out of the terrestrial digital TV broadcasting service area or in a place where airwaves are weak?	-
● Are the channels set?	P.151

■Osaifu-Keitai

Cannot use the Osaifu-Keitai.	
● Is Osaifu-Keitai lock set?	P.155
● You may not be able to use the Osaifu-Keitai function regardless of the Osaifu-Keitai lock setting if the battery pack is removed from the terminal. To use the Osaifu-Keitai function, turn on the power once.	-
● Do you wave the terminal over a reader with the mark facing the reader?	P.154

■Using overseas

The terminal becomes unusable while overseas (although is displayed).	
● Have you applied for WORLD WING? Check the subscription status.	-
The terminal becomes unusable while overseas (is displayed).	
● Are you outside the international roaming service area or in a place with poor signal strength? Refer to "Mobile Phone User's Guide [International Services]" and DOCOMO "International Services website" to check whether a service area or network operator is available.	-
● Change the network settings and operator settings. • Set "Network Mode" to "Auto". • Set "Network operators" to "Select automatically".	P.164
● The terminal may be usable by rebooting.	-
Data communication is not available while overseas.	
● Activate "Data roaming".	P.164

Suddenly the terminal becomes unusable while overseas.	
● Have you exceeded your maximum call charge limit? A maximum call charge limit is preset in the WORLD WING international roaming service. If you have exceeded your maximum call charge limit, you can restart the services by paying the accumulated call charges.	-
Cannot receive calls while overseas.	
● Is "Restricting incoming calls" set to "Activate restricting"?	P.166
No caller ID is displayed/A notified caller ID is different from that of the caller/Functions that use Phonebook data or caller ID notifications do not work.	
● Even when a caller notifies the caller ID, it is not displayed on the terminal unless notified from the network or network operator used. And, a notified caller ID may be different from that of the caller by some networks or networks operators you use.	-

■Data management

Data transfer is not working.	
● Are you using a USB hub? If you use a USB hub, data transfer may not work properly.	P.132

■Infrared data exchange

Cannot receive all Phonebook data.	
● Is there available space in the main terminal? In case of space shortage while receiving data, data reception is stopped.	-

■Bluetooth function

The terminal cannot find or be connected to a Bluetooth enabled device.	
● Put the Bluetooth enabled device (commercial) on standby and register it on the terminal. If you want to delete a registered device and register it again as a new device, you must delete the registered device from both the Bluetooth enabled device (commercial) and the terminal before you register it again.	P.103

You cannot make a call from the terminal with an external device such as a car navigation system and a handsfree device that continues to be connected.	
● If you make several calls when no one answers the call or the recipient's phone is out of service, you may not be allowed to make a call to the number. In that case, turn off the power of the terminal once and turn on the power again.	-

Error message

The PIN1 is blocked. Enter PUK code.	
● This message appears when you turn on the power while PIN1 code is locked. Tap "Emergency call" and enter "✳✳05✳ [PIN unblocking key]✳ [new PIN1 code]✳ [new PIN1 code]#".	P.112
The PUK is blocked.	
● This message appears if you turn on the power or attempt to perform an operation related to the miniUIM while the PIN unblocking key is locked. Contact a docomo Shop Service Counter.	P.113

Smartphone Remote Support

You can receive operation support for terminal operation and setting by sharing screens on your terminal with DOCOMO.

- It is not available if the miniUIM is not inserted, during international roaming or airplane mode.
- Smartphone remote support is a paid service that requires subscription.
- Some operations and settings are not supported.
- For detailed information about smartphone remote support, see the NTT DOCOMO website.

1 Call Smartphone remote support center

0120-783-360
Business hours: 9:00 a.m. to 8:00 p.m. (open all year round)

2 From the application list screen, "遠隔サポート" (Remote support)

- When you first use remote support, you need to accept a "ソフトウェア使用許諾書" (License agreement).

3 Enter the connection number guided by DOCOMO

4 Remote support starts after connection

Warranty and After-Sales Service

Warranty

- Be sure to receive a warranty at the time of purchase of the terminal. Read contents of the warranty, confirm information such as the "Shop name and date of purchase" and keep it in a safe place. If necessary items are not described, immediately contact the shop of purchase. The warranty for free repair is valid for one year from the date of purchase.
- This product and its accessories are subject to be modified, in part or whole, for improvement without prior notice.
- Data saved in your contacts, etc. may be modified or lost due to the malfunction, repair or other handling of the terminal. You should therefore make a copy of your contacts data, etc. as a precautionary measure. If you have the terminal repaired, most of the previously downloaded data will not be transferred to other terminals, as prohibited by the Copyright Act.
  * You can back up contacts data from the terminal to a microSD card.

After-sales service

For problems with the terminal

Before requesting repairs, read "Troubleshooting" in this instruction manual. If the problem still persists, contact "Repairs" (in Japanese only) at the last page of this manual.

For repairs after inquiry

Bring the terminal to a repair counter specified by DOCOMO. Repairs are accepted during business hours of a repair counter. Also, you must bring the warranty. Note that it may take some days to repair the terminal depending on the malfunction state.

■During the warranty period

- The terminal is repaired at no charge under the conditions of the warranty.
- Make sure to bring the warranty for repair. You will be charged even during the warranty period if the warranty is not presented or the trouble or damage is caused by your inappropriate handling (such as damage to display or connector, etc.).
- You will be charged even during the warranty period if malfunction is caused by the use of devices and consumables other than those specified by DOCOMO.

■Repair may not be possible in the following cases:

- When a repair counter judges the cause of malfunction is exposure to water (Example: when wet-indication sticker reacts)
- When, as the result of inspection, corrosion is found due to exposure to water, condensation or sweat, or any of the internal boards are damaged or deformed (damage to the external connector terminal (earphone/ microphone terminal) or display or cracked body could be the case as well)

* Since these conditions are outside the scope of the warranty, any repairs, if at all possible, will be charged.

■After expiration of the warranty

All repairs that are requested are charged.

■Replacement parts

Replacement parts (parts required to maintain functions) will in principle be kept in stock for 6 years after termination of production. However, depending on the malfunctioning part, repair may not be possible due to a lack of replacement parts. Even after the stock period has expired, the repair of some malfunctioning parts may be possible. You should therefore contact "Repairs" (in Japanese only) at the last page of this manual.

Precautions

- Never modify the terminal or accessories.
  - Doing so may result in fire, injuries or malfunctions.
  - The modified terminal may be repaired only if the owner agrees on that all the modified parts are restored to the original conditions. However, repairs may be refused depending on the modifications.
    The following cases may be considered as modifications.
    - Put a sticker on portions such as of the display or keys.
    - Glued decorations on the terminal using adhesion bond, etc.
    - Change the parts such as exterior to other than DOCOMO standard parts.
  - Malfunction and damage due to modifications will be repaired at the owner's expense, even if the warranty period is still effective.
- The model plate must not be removed from the terminal.
  The model plate certifies that the terminal satisfies technical standards.

It should be noted that if the plate is removed or is replaced with a different plate, and the original model plate cannot be verified, it may disqualify the unit from repairs due to not being able to determine the technical standards of that particular phone.

- Note that the settings and other information may be reset (cleared) as a result of malfunction, repair or other handling of the terminal. In this case, make the settings again.
- When the repair is executed, MAC address of Wi-Fi/Bluetooth address in the terminal may be changed regardless of repaired part.
- Magnetic components are used in the parts of the terminal that are described below. Do not allow cash cards or other devices that are vulnerable to magnetism to come into contact with the phone.

  Parts where magnetic components are used: camera, lower part of camera, speaker, around earpiece

- The terminal has waterproof capability, however, if the inside of the terminal has gotten wet or moist, immediately power off the terminal and remove the battery pack from it, and then bring it to the repair counter as soon as possible. However, note that we may not repair the terminal depending on the extent of the damage.

Memory dial (Contacts function) and downloaded data

- When you change the model or repair the terminal, data that has been imported, downloaded or created by you may be changed or lost. DOCOMO shall have no liability for any change or loss of any kind. Under some circumstances, DOCOMO may replace the terminal with its equivalent instead of repairing it. The data stored in the terminal will not be transferred to the new terminal (some of the data may be able to be transferred).

Updating Software

Software Update is a function that connects to the network to check whether software on the terminal needs to be updated, downloads a portion of the software by packet communication as and when required, and updates the software. The NTT DOCOMO website provides information about required software updates.

- There are three ways to update software: auto update, immediate update, and booked update.
  - Auto update:
    Automatically download software, and overwrite (update) it at a time set beforehand.
  - Immediate update:
    Update whenever you want to update.
  - Booked update:
    Book a time to install an update package, and the software is updatead automatically at the booked time.

Before updating software

- Do not remove the battery pack while updating software. This may result in a failed update.
- Fully charge the battery pack before updating software.
- Software cannot be updated in the following circumstances.
  - During a call/when outside service area
  - During international roaming
  - Airplane mode
  - When connected to a Wi-Fi network
  - During a major update
  - During USB tethering
  - During Wi-Fi tethering
  - When the date/time are not correctly set
  - When the battery level is too low for software update
  - When there is insufficient free space for software update
- Software update (download, installation) may take a long time.
- During a software update, you cannot make or receive calls, use any communication function, or use any functions (calls can be received during downloading).
- When updating software, the terminal performs SSL/TLS communication with the server (DOCOMO site).
- We recommend that you update software without moving and when you have strong reception (4 wave-level bars).
  * If the reception deteriorates during a software update or the download is stopped, move to a location with a better reception and start the software update again.
- A message appears to inform you that you cannot update during international roaming or when outside the service area.

- When there is insufficient battery level for a software update, a message appears to inform you that charge is insufficient for updating.
- If the software has already been updated, a message appears to inform you that no update is needed when you check for software updates.
- SMS messages sent to you during a software update are stored at the SMS center.
- During a software update, the terminal information (model and manufacturing numbers) are automatically sent to a software update server managed by DOCOMO. DOCOMO shall not use this information for any purpose other than software update.
- If the software update fails, a message appears to inform you that the rewrite failed and no further operation may be possible. In this case, please take the terminal to a repair counter specified by DOCOMO.
- If a PIN code has been set, you will need to enter the PIN code when you restart the terminal after the update has been installed.
- Do not start any other applications during a software update.

NOTE

- You can update software while still retaining data (such as Phonebook, camera images, email, downloaded data, etc.) on the terminal. Please note, however, that such data may not be protected, depending on the state of the terminal (malfunction, damage, exposure to water, etc.). It is recommended to back up necessary data. Please note that some data, such as downloaded data, cannot be backed up.

Automatically updating software (auto update)

You can automatically download new software, which will overwrite the old software at a time you set beforehand.

- The auto update setting is set to "Automatic Update" by default.
- Once the terminal becomes ready to overwrite the old software, (Software update is available) appears in the status bar, and after checking the overwrite time, you can select to change the overwrite time, immediately overwrite, etc.
- When the overwrite time arrives while (Software update is available) is displayed, the old software is automatically overwritten, and (Software update is available) is no longer displayed.
- At times such as when there is insufficient battery level or you are in a call when the overwrite time arrives, the software update does not start, and instead starts at the same time on the next day.
- Software cannot automatically update when the automatic update setting is "Manual Update", during data communication for an immediate software update, etc.

Configuring automatic update

1 From the Home screen, ▶ "Settings" ▶ "About phone" ▶ "Software Update"

2 "Configure the software update" ▶ Tap the action when a notification appears for software update

- To update software automatically: "Automatic Update"
- Not to update software automatically: "Manual Update"

Operation when an update is required

(Software update is available) appears in the status bar once software is automatically downloaded.

1 Open the Notifications panel, "(Software update is available)"

2 Select the overwrite method

- When a software update is required, the overwrite time is displayed.

■Starting overwriting at a specified time

▶ "OK"

- The display returns to the Home screen. Overwriting starts when the set time arrives.
- appears in the status bar when overwriting is completed. no longer appears after being checked.

■Changing the overwrite start time

- Set the time for installing the update package.

▶ Go to step 1 of "Booking a time to update software" → P.183

■Starting overwriting immediately

▶ Go to step 1 of "Updating software immediately" → P.182

NOTE

- (Software update is available) appears in the status bar if the software update was not able to launch at the automatic update time.

Launching a software update (immediate update)

1 From the Home screen, ☰ ▶ "Settings" ▶ "About phone" ▶ "Software Update"

2 "Start the software update" ▶ "Yes"

- Once download starts, the software automatically updates.
- Canceling a download partway deletes all data downloaded until then.
- If an update is not required, "No update is needed." appears.

3 "OK"

- Update starts after the terminal restarts.
- All operations are disabled during an update. You also cannot cancel an update.
- The terminal restarts twice automatically during an update.

4 The Home screen appears

- ☑ appears in the status bar. ☑ no longer appears after being checked.

Updating software immediately

1 "Starts update"

2 "Ready for update. Please keep application clear" ▶ "OK"

- Overwriting starts automatically about 3 seconds after "Ready for update. Please keep application clear" is displayed.
- All operations are disabled during overwriting. You also cannot cancel overwriting.
- Once overwriting is completed, the terminal restarts automatically.

3 After the terminal restarts, software update starts automatically

- All operations are disabled during an update. You also cannot cancel an update.
- Once an update is completed, the terminal restarts automatically in about 5 seconds.

4 Open the Notifications panel, "☑"

- The software update completes, and the Home screen is displayed.

- ✔ (Update completed) appears in the status bar to indicate an update is completed. ✔ (Update completed) no longer appears after being checked.

Display after a software update is completed

✔ appears in the status bar. Open the Notifications panel and tap the notification. A message notifying you that a software update is completed appears.

Booking a time to update software (booked update)

If you want to book a different time for installing an update package, you can set a time for updating software beforehand.

1 **"Sets Time"**
- The screen for setting an overwrite start time appears.
- The current terminal time is displayed.

2 **Enter the desired time ▶ "Set"**
- Set the time.
- Tap "+" / "-" to change the update time, and then tap "Set".

When the booked time arrives

1 **"Ready for update. Please keep application clear" appears ▶ "OK"**
- The software update starts automatically about 3 seconds after "Ready for update. Please keep application clear" is displayed.
- Before the time booked for a software update arrives, be sure to display the Home screen and be in a location with good signal reception.
- If there is insufficient battery level for a software update at the booked time, software is updated at the same time on the next day.
- Software is not updated at the booked time if during a major update.
- If an alarm or other function is set for a time that coincides with a booked time, the software update takes priority.
- If the terminal is turned off when the time booked for a software update arrives, the software is updated when the same time is again reached after turning on the terminal.

Major Update

You can upgrade the version of the terminal's OS (major update).

- For precautions on a major update, refer to "Before updating software" under "Updating Software". → P.179
- For the latest software information, refer to the manufacturer's site (MEDIAS NAVI): http://www.medias.net/ (in Japanese only)

1 From the Home screen, ☰ ▶ "Settings" ▶ "About phone" ▶ "Major updates"

2 Select any item:

Update now……Launch a major update.

Updates by network……Upgrade the OS version via a network.

Updates by SD card……Upgrade the OS version via a microSD card.

Confirmation of update……Check whether the terminal is able to update.

Auto update……Regularly check update information automatically, and check whether you can upgrade the version.

■Using "Updates by network"

- Since major updates are carried out via microSD card, you must insert a microSD card beforehand.
- You cannot carry out a major update:
  - During international roaming
  - When "Storage card encryption" is enabled → P.110
  - While in Airplane mode
  - While mounting during USB connection
  - While updating software
  - During USB tethering
  - During Wi-Fi tethering
  - If there is insufficient battery level for a major update
  - If there is insufficient free space on the microSD card for a major update
- Packet communication charges are incurred for a major update using a 3G network. Since packet communication charges can become costly, a flat-rate packet rate is strongly recommended.
- Connection to a Wi-Fi network may be necessary depending on the version of the software to be updated.
- Before updating software via a Wi-Fi network, configure Wi-Fi settings beforehand and check that the terminal is connected to a Wi-Fi network. → P.60

■Using "Updates by SD card"

- To carry out a major update, connect the terminal to a PC (P.132), and download the update software from the manufacturer's site (MEDIAS NAVI) to a microSD card by the PC. For more information, refer to the manufacturer's site (MEDIAS NAVI).
- You cannot carry out a major update:
  - While mounting during USB connection
  - When "Storage card encryption" is enabled → P.110
  - If there is insufficient battery level for a major update
  - If there is insufficient free space on a microSD card for a major update
  - After the major update is completed, manually delete the update software downloaded to your microSD card (the software can be safely removed once the major update has completed normally).

Main Specifications

■Phone

Product name		N-05D
Dimensions		Approx. 130 mm (height) × approx. 67 mm (width) × approx. 6.7 mm (thickness) (Approx. 7.9 mm at the thickest part)
Weight		Approx. 109 g (with battery pack)
Memory	ROM	4GB
	RAM	1GB
Continuous standby time	FOMA/3G	Stationary (when "Auto" is set[*1]): Approx. 320 hours
	GSM	Stationary (when "Auto" is set[*1]): Approx. 220 hours
Continuous call time	FOMA/3G	Approx. 320 minutes
	GSM	Approx. 330 minutes
Charging time		AC adapter: Approx. 200 minutes DC adapter: Approx. 200 minutes
1Seg viewing time		Approx. 290 minutes
Display	Type	TFT 16,777,216 colors
	Size	Approx. 4.3 inches
	Pixels	921,600 pixels (720 × 1280 dots)
Image pickup device	Type	CMOS
	Size	1/4 inch
	Effective pixels	Approx. 8.1 million pixels
Camera	Recorded pixels (maximum)	Approx. 8.0 million pixels
	Digital zoom	Photos: Approx. 5.0 times max. / Videos: Approx. 4.0 times max.

Recorder	Number of photos that can be recorded	When recorded in the microSD card (2 GB): Approx. 9,900 photos max.*2
	Continuous photo shooting	Shooting interval 0.03/0.1/0.5 seconds: 5 to 10 photos; Shooting interval 1.0/2.0 seconds: 5 to 100 photos
	Photo file format	JPEG
	Video recording time	When recorded in the microSD card (2 GB): Approx. 164 minutes max.*3
	Video file format	MP4
Audio	WMA file	Approx. 19 hours
	MP3 file	Approx. 19 hours
Wireless LAN*4		IEEE802.11b/g/n (2.4GHz band) compliant
Bluetooth	Compliant version	Bluetooth Specification Version 4.0 compliant*5
	Power	Bluetooth Specification Power Class 2
	Line-of-sight communication distance*6	Up to approx. 10 m
	Compliant profile	HSP, HFP, A2DP, AVRCP, OPP, PBAP, SPP, ANP, PASP, FMP, TIP, PXP

*1 To set the network connection change, use "Mobile networks" (P.99).
*2 This is the maximum number of photos that can be saved to 1 folder, when Size = VGA (640 × 480) and Quality = Normal (file size = 160 KB).
*3 This is the recording time per video under the following conditions:
Size = VGA (640×480), Quality = Normal
*4 The wireless LAN of this product has received Wi-Fi certification.
*5 It is confirmed that the terminal and all Bluetooth devices are compliant with Bluetooth standards designated by Bluetooth SIG, and they are authenticated. However, procedures may differ or data transfer may not be possible depending on the device's characteristics or specifications.
*6 The available connection distance may be extremely shorter depending on the ambient environment (wall, furniture, etc.) or building structure.

■Battery pack

Product name	Battery Pack N32
Battery type	Lithium ion battery
Nominal voltage	3.8 V DC
Nominal capacity	1,400 mAh

Specific Absorption Rate (SAR), etc. of Mobile Phones

Specific Absorption Rate (SAR) of Mobile Phones

This model N-05D mobile phone complies with Japanese technical regulations and international guidelines regarding exposure to radio waves.
This mobile phone was designed in observance of Japanese technical regulations regarding exposure to radio waves[*1] and limits to exposure to radio waves recommended by a set of equivalent international guidelines. This set of international guidelines was set out by the International Commission on Non-Ionizing Radiation Protection (ICNIRP), which is in collaboration with the World Health Organization (WHO), and the permissible limits include a substantial safety margin designed to assure the safety of all persons, regardless of age and health condition.

The technical regulations and international guidelines set out limits for radio waves as the Specific Absorption Rate, or SAR, which is the value of absorbed energy in any 10 grams of tissue over a 6-minute period. The SAR limit for mobile phones is 2.0 W/kg. The highest SAR value for this mobile phone when tested for use at the ear is 0.472 W/kg. There may be slight differences between the SAR levels for each product, but they all satisfy the limit.
The actual SAR of this mobile phone while operating can be well below that indicated above.
This is due to automatic changes to the power level of the device to ensure it only uses the minimum required to reach the network. Therefore in general, the closer you are to a base station, the lower the power output of the device.
This mobile phone can be used in positions other than against your ear. This mobile phone satisfies the international guidelines when used with a carrying case or a wearable accessory approved by NTT DOCOMO, INC.[*2] In case you are not using the approved accessory, please use a product that does not contain any metals, and one that positions the mobile phone at least 1.5 cm away from your body.

The World Health Organization has stated that to discern whether mobile phones bring about any hidden health risks, an abundance of research has been carried over the past 20 years. Until present, no effects at all on health have been found that can be deemed attributable to mobile phone use. Please refer to the WHO website if you would like more detailed information.
http://www.who.int/docstore/peh-emf/publications/facts_press/fact_japanese.htm

Please refer to the websites listed below if you would like more detailed information regarding SAR.
Ministry of Internal Affairs and Communications Website:
http://www.tele.soumu.go.jp/e/sys/ele/index.htm
Association of Radio Industries and Businesses Website:
http://www.arib-emf.org/index02.html (in Japanese only)
NTT DOCOMO, INC. Website:
http://www.nttdocomo.co.jp/english/product/sar/
NEC CASIO Mobile Communications, Ltd. Website:
http://www.n-keitai.com/lineup/sar/ (in Japanese only)

*1 Technical regulations are defined by the Ministerial Ordinance Related to Radio Law (Article 14-2 of Radio Equipment Regulations).
*2 Regarding the method of measuring SAR when using mobile phones in positions other than against the ear, international standards (IEC62209-2) were set in March of 2010.
The information communication sectional committee of the information communication council partly submitted a report on consultation No. 118 in October, 2011 for the Japanese technical standard.

Radio Frequency (RF) Signals

THIS MODEL PHONE MEETS THE U.S. GOVERNMENT'S REQUIREMENTS FOR EXPOSURE TO RADIO WAVES.
Your wireless phone contains a radio transmitter and receiver. Your phone is designed and manufactured not to exceed the emission limits for exposure to radio frequency (RF) energy set by the Federal Communications Commission of the U.S. Government. These limits are part of comprehensive guidelines and establish permitted levels of RF energy for the general population. The guidelines are based on standards that were developed by independent scientific organizations through periodic and thorough evaluation of scientific studies.
The exposure standard for wireless mobile

phones employs a unit of measurement known as the Specific Absorption Rate (SAR). The SAR limit set by the FCC is 1.6 W/kg.* Tests for SAR are conducted using standard operating positions accepted by the FCC with the phone transmitting at its highest certified power level in all tested frequency bands. Although the SAR is determined at the highest certified power level, the actual SAR level of the phone while operating can be well below the maximum value. This is because the phone is designed to operate at multiple power levels so as to use only the power required to reach the network. In general, the closer you are to a wireless base station antenna, the lower the output. Before a phone model is available for sale to the public, it must be tested and certified to the FCC that it does not exceed the limit established by the U.S. government-adopted requirement for safe exposure. The tests are performed on position and locations (for example, at the ear and worn on the body) as required by FCC for each model. The highest SAR value for this model phone as reported to the FCC when tested for use at the ear is 0.66 W/kg, and when worn on the body, is 1.06 W/kg. (Body-worn measurements differ among phone models, depending upon available accessories and FCC requirements). While there may be differences between the SAR levels of various phones and at various positions, they all meet the U.S. government requirement.

The FCC has granted an Equipment Authorization for this model phone with all reported SAR levels evaluated as in compliance with the FCC RF exposure guidelines. SAR information on this model phone is on file with the FCC and can be found under the Display Grant section at https://gullfoss2.fcc.gov/oetcf/eas/reports/GenericSearch.cfm after search on FCC ID A98-QOE9653.

For body worn operation, this phone has been tested and meets the FCC RF exposure guidelines when used with an accessory designated for this product or when used with an accessory that contains no metal and that positions the handset a minimum of 1.0 cm from the body.

Non-compliance with the above restrictions may result in violation of FCC RF Exposure guidelines.

---

* In the United States, the SAR limit for wireless mobile phones used by the public is 1.6 watts/kg (W/kg) averaged over one gram of tissue. SAR values may vary depending upon national reporting requirements and the network band.

FCC Regulations

This mobile phone complies with part 15 of the FCC Rules. Operation is subject to the following two conditions: (1) This device may not cause harmful interference, and (2) this device must accept any interference received, including interference that may cause undesired operation.
This mobile phone has been tested and found to comply with the limits for a Class B digital device, pursuant to Part 15 of the FCC Rules. These limits are designed to provide reasonable protection against harmful interference in a residential installation.
This equipment generates, uses and can radiate radio frequency energy and, if not installed and used in accordance with the instructions, may cause harmful interference to radio communications. However, there is no guarantee that interference will not occur in a particular installation; if this equipment does cause harmful interference to radio or television reception, which can be determined by turning the equipment off and on, the user is encouraged to try to correct the interference by one or more of the following measures:
Reorient or relocate the receiving antenna.

- Increase the separation between the equipment and receiver.
- Connect the equipment into an outlet on a circuit different from that to which the receiver is connected.
- Consult the dealer or an experienced radio/TV technician for help.

Changes or modifications not expressly approved by the party responsible for compliance could void the user's authority to operate the equipment.

Declaration of Conformity

Hereby, NEC CASIO Mobile Communications, Ltd. declares that this product is compliance with the essential requirements and other relevant provisions of Directive 1999/5/EC. Declaration of Conformity can be found on http://www.n-keitai.com/lineup/index.html (Japanese only).

CE 0168 !

This product uses non-harmonised frequency and is intended for use in all European countries. The WLAN can be operated in the EU without restriction indoors, but cannot be operated outdoors in France.

This mobile phone complies with the EU requirements for exposure to radio waves. Your mobile phone is a radio transceiver, designed and manufactured not to exceed the SAR* limits** for exposure to radio-frequency (RF) energy, which SAR* value, when tested for compliance against the

standard was 0.471 W/kg. While there may be differences between the SAR* levels of various phones and at various positions, they all meet*** the EU requirements for RF exposure.

* The exposure standard for mobile phones employs a unit of measurement known as the Specific Absorption Rate, or SAR.

** The SAR limit for mobile phones used by the public is 2.0 watts/kilogram (W/kg) averaged over ten grams of tissue, recommended by The Council of the European Union. The limit incorporates a substantial margin of safety to give additional protection for the public and to account for any variations in measurements.

*** Tests for SAR have been conducted using standard operating positions with the phone transmitting at its highest certified power level in all tested frequency bands. Although the SAR is determined at the highest certified power level, the actual SAR level of the phone while operating can be well below the maximum value. This is because the phone is designed to operate at multiple power levels so as to use only the power required to reach the network. In general, the closer you are to a base station antenna, the lower the power output.

Export Administration Regulations

This product and its accessories may be under coverage of the Export Administration Regulations of Japan ("Foreign Exchange and Foreign Trade Control Laws" and the related laws and regulations). When exporting this product and its accessories, take necessary procedures on your responsibility and expense. For details, contact Ministry of Economy, Trade and Industry of Japan.

Intellectual Property Right

Copyright and portrait rights

You have no right to copy, modify, or distribute contents such as text, images, music, or software downloaded from websites on the Internet, or images captured by the camera of this product without permission from the copyright holder except when the copy or quote is for personal use that is allowed under Copyright Law.
Note that it may be prohibited to capture or record live performances or exhibitions even for personal use.
Refrain from taking portraits of other people and uploading such portraits to websites using this product without their consent, as this violates portrait rights.

Trademarks

- "FOMA", "i-mode", "i-αppli", "Deco-mail","ToruCa", "mopera", "mopera U", "WORLD CALL", "iD", "WORLD WING", "sp-mode" and "ToruCa" logo, "mopera U" logo, "Osaifu-Keitai" logo, "iD" logo, "iC" logo, "sp-mode" logo are trademarks or registered trademarks of NTT DOCOMO, INC.
- "Catch Phone (Call waiting service)" is a registered trademark of Nippon Telegraph and Telephone Corporation.
- Powered by emblend™ Copyright 2010-2012 Aplix Corporation. All Rights Reserved. emblend and emblend-related trademarks are trademarks or registered trademarks of Aplix Corporation in Japan and other countries.
- is a registered trademark of FeliCa Networks, Inc.
- microSDHC logo is a trademark of SD-3C, LLC.

- Rovi, G-GUIDE, G-GUIDE MOBILE and G-Guide related logos are trademarks or registered trademarks of Rovi Corporation and/or its subsidiaries in Japan.

- "PictMagic", "MEDIAS", "MEDIAS NAVI", "Tap search", "Quick Shot", "MEDIAS WELLNESS", "Days" and "MEDIAS BEAUTY" are trademarks or registered trademarks of NEC CASIO Mobile Communications, Ltd.
- Microsoft®, Windows®, Windows Media® and Windows Vista® are trademarks or registered trademarks of Microsoft Corporation in the United States and/or other countries.
- Microsoft® Exchange ActiveSync® is a trademark or registered trademark of Microsoft Corporation in the United States and/or other countries.
- T9® is a trademark or registered trademark of Nuance Communications, Inc. and its affiliates in the United States and other countries.

- PhotoSolid®, MovieSolid® and their logos are trademarks or registered trademarks of Morpho Inc. in Japan and other countries.
- "Google", "Google" logo, "Android", "Android" logo, "Android Market", "Android Market" logo, "Gmail", "Gmail" logo, "Google Talk", "Google Talk"logo, "Google Voice Search", "Google Voice Search" logo, "Google Maps", "Google Maps" logo, "Google Maps Navigation", "Google Maps Navigation" logo, "Google Places", "Google Places" logo, "Google Calendar", "YouTube", "YouTube" logo, "Google+", "Google+" logo, "Google Latitude", "Google Latitude" logo, "Google Videos", "Google Videos" logo, "Google Messenger", "Google Messenger" logo, and "Picasa" are trademarks or registered trademarks of Google Inc.
- The Wi-Fi CERTIFIED Logo is a certification mark of the Wi-Fi Alliance.

- The Wi-Fi Logo is a certification mark of the Wi-Fi Alliance.
- The Wi-Fi Protected Setup Mark is a mark of the Wi-Fi Alliance.
- Wi-Fi®, Wi-Fi CERTIFIED™, Wi-Fi Protected Setup™, WPA™ and WPA2 ™ are marks or registered marks of the Wi-Fi Alliance.

- "らくらく無線スタート" is a registered trademark of NEC AccessTechnica, Ltd.
- "Twitter" is a trademark or registered trademark of Twitter, Inc.
- "mixi" is a registered trademark of mixi, Inc.
- "Facebook" is a trademark or registered trademark of Facebook, Inc.
- "BeeTV" is a trademark or registered trademark of Avex Entertainment Inc.
- "ATOK" is a registered trademark of JustSystems Corporation.

- "ついっぷる" is a trademark or registered trademark of NEC BIGLOBE, Ltd.
- "Soradas" is a registered trademark of MTI Ltd.
- G-SHOCK is a registered trademark of CASIO COMPUTER CO., LTD.
- DigiOn and DiXiM are trademarks of DigiOn, Inc.
- Quickoffice is a trademark or a registered trademark of Quickoffice, Inc. in the United States and/or other countries.
- This product uses "FontAvenue" of NEC Corporation.
- DLNA®, the DLNA Logo and DLNA CERTIFIED® are trademarks, service marks, or certification marks of the Digital Living Network Alliance.

- TouchSense® Technology Licensed from Immersion Corporation.
  Immersion TouchSense 3000 and MOTIV™ protected under one or more of the U.S. Patents at the following address http://www.immersion.com/haptics-technology/patent-marking/index.html.

- Other company names or product names described in this manual are trademarks or registered trademarks of those companies.

Others

- THIS PRODUCT IS LICENSED UNDER THE MPEG-4 VISUAL PATENT PORTFOLIO LICENSE FOR THE PERSONAL AND NON-COMMERCIAL USE OF A CONSUMER FOR (i) ENCODING VIDEO IN COMPLIANCE WITH THE MPEG-4 VISUAL STANDARD ("MPEG-4 VIDEO") AND/OR (ii) DECODING MPEG-4 VIDEO THAT WAS ENCODED BY A CONSUMER ENGAGED IN A PERSONAL AND NON-COMMERCIAL ACTIVITY AND/OR WAS OBTAINED FROM A VIDEO PROVIDER LICENSED BY MPEG LA TO PROVIDE MPEG-4 VIDEO. NO LICENSE IS GRANTED OR SHALL BE IMPLIED FOR ANY OTHER USE. ADDITIONAL INFORMATION INCLUDING THAT RELATING TO PROMOTIONAL, INTERNAL AND COMMERCIAL USES AND LICENSING MAY BE OBTAINED FROM MPEG LA, L.L.C. SEE HTTP://WWW.MPEGLA.COM.
- THIS PRODUCT IS LICENSED UNDER THE AVC PATENT PORTFOLIO LICENSE FOR THE PERSONAL USE OF A CONSUMER OR OTHER USES IN WHICH IT DOES NOT RECEIVE REMUNERATION TO (i) ENCODE VIDEO IN COMPLIANCE WITH THE AVC STANDARD ("AVC VIDEO") AND/OR (ii) DECODE AVC VIDEO THAT WAS ENCODED BY A CONSUMER ENGAGED IN A PERSONAL ACTIVITY AND/OR WAS OBTAINED FROM A VIDEO PROVIDER LICENSED TO PROVIDE AVC VIDEO. NO LICENSE IS GRANTED OR SHALL BE IMPLIED FOR ANY OTHER USE. ADDITIONAL INFORMATION MAY BE OBTAINED FROM MPEG LA, L.L.C. SEE HTTP://WWW.MPEGLA.COM.
- FeliCa is a contactless IC card technology developed by Sony Corporation. FeliCa is a registered trademark of Sony Corporation.
- Contains Adobe® Flash® Player by Adobe Systems Incorporated.
  Adobe Flash Player Copyright© 1996-2012 Adobe Systems Incorporated. All rights reserved.
  Adobe, Flash and Flash logo are registered trademarks or trademarks of Adobe Systems Incorporated in the United States and/or other countries.

- The Bluetooth word mark and logos are owned by the Bluetooth SIG, INC. and any use of such marks by NTT DOCOMO, INC. is under license. Other trademarks and trade names are those of their respective owners.

- Content owners use Microsoft PlayReady™ content access technology to protect their intellectual property, including copyrighted content. This device uses PlayReady technology to access PlayReady-protected content and/or WMDRM-protected content. If the device fails to properly enforce restrictions on content usage, content owners may require Microsoft to revoke the device's ability to consume PlayReady-protected content. Revocation should not affect unprotected content or content protected by other content access technologies. Content owners may require you to upgrade PlayReady to access their content. If you decline an upgrade, you will not be able to access content that requires the upgrade.
- ©MTI Ltd.

Notational conventions for Windows

- The abbreviations of operating systems (Japanese versions) below are used in this manual.
  - Windows 7 stands for Microsoft® Windows® 7 (Starter, Home Basic, Home Premium, Professional, Enterprise and Ultimate).
  - Windows Vista stands for Windows Vista® (Home Basic, Home Premium, Business, Enterprise and Ultimate).
  - Windows XP indicates the Microsoft® Windows® XP Professional operating system or Microsoft® Windows® XP Home Edition operating system.

Using Adobe® Flash® Player

- Adobe® Flash® Player embedded in this product ("Software") is protected by copyright laws. Be sure to observe the following rules when using the Software.
  ① You shall not copy or distribute the Software.
  ② You shall not modify, adapt, translate or create derivative works based upon the Software.
  ③ You shall not reverse engineer, decompile, disassemble, or otherwise attempt to discover the source code of the Software.
  ④ You shall not make a claim for any consequential, indirect, incidental, special damages, or any lost profits by using the Software.

GPL/LGPL-applicable software

- This product contains software licensed complying with GNU General Public License (GPL) or GNU Lesser General Public License (LGPL). You can obtain the source code for the software and reproduce, redistribute, or modify the software in accordance with the GPL or LGPL.
  For information on GPL and LGPL, from the Home screen, ☰ ▶ "Settings" ▶ "About phone" ▶ "Legal information" ▶ "Open source licenses"

■Obtaining source code

For information on obtaining source code, see the following website.
http://www.n-keitai.com/guide/download/
(in Japanese only)
Inquiries regarding the content of source code cannot be responded to.

Index

Alphabets

About Phone 117
Accessibility (settings) 116
Accessories 1
Access point 58
Account 62
  Email account 62
  Setting 113
After-sales service 176
Airplane mode 100
Alarm 156
Alarm volume 108
Android Market 144
Applications
  Installing 144
  List 76
  List screen 75
  Purchasing 145
  Setting 113
  Shortcuts 72
  Uninstalling 76
Area Mail 124
Attaching/removing the back cover 37
Backlight 108
Battery pack 47
BLE advanced settings 104
Bluetooth
  Calling 86
  Communication 131
  Setting 101
Booking (1Seg) 152
Booking viewing (1Seg) 152
Bookmarks 127
Brightness (screen) 108
Browser 126
Calculator 159
Calendar 157
Caller ID notification service 97
Call Forwarding service 95
Call Log 87
Call rejection (settings) 107
Call settings 107
Call volume 86
Call Waiting service 96
Camera 138
Changing wallpaper 74
Channel setting 151
Charging 49
  Adapter 51
  Desktop holder 50
  PC 52
Charging with an AC adapter 51
Charging with an DC adapter 51
Charging with a PC 52
Charging with the adapter 51
Charging with the desktop holder 50
Chat 126
Check phone number (yours) 88
Clock (application) 156
Clock setting 117
Connecting to a PC 132
Data roaming (overseas) 164

Date setting 117
Declining calls 86
Desktop holder 50
Display (setting) 108
DiXiM 134
DLNA 134
Docking a shortcut 73
docomo application password 108
Drag 55
Draining water 39
eco mode 109
Email
  Area Mail 124
  Email 120
  Email account 62
  Gmail 121
  SMS 118
  sp-mode mail 118
Emergency call 84
Entering emoticons 69
Entering smileys 69
Entering symbols 69
Entering text 66
Error messages 175
Export Administration Regulations 192
Exporting
  Bookmarks 128
  Email 120
  Phonebook 88
  SMS 118
Factory data reset 114
Flick 56
Flick input 68
Folders (Home screen) 73
Formatting (microSD card) 115
Gallery 141
Gesture input 67
Gmail 121
Google Maps 147
Google Talk 125
GPS 146
Gガイド番組表 (G-GUIDE EPG) 152
Handling precautions 27
Home screen 72
iC transfer Service 153
iD設定アプリ (iD appli) 160
Importing
  Bookmarks 128
  Email 120
  Phonebook 88
  SMS 118
Incoming call lamp 109
Incoming calls history 87
Infrared data exchange 130
Initial Settings 57
Installing (applications) 144
Intellectual property right 192
International dial assist 164
International roaming 161
Keyboard
  QWERTY 66
  Settings 116
  10-key 66
Koe-no-Takuhaibin 92

Language (setting) 116
Latitude 149
Location Service 147
Location (setting) 110
Main Specifications 185
Major update 183
Making a call 84
Making a call (overseas) 85, 164
Making a call overseas 85, 164
Making an international call 85, 164
Market 144
Media playback volume 108
Media Player 142
microSD card 45
  Accessing from a PC 132
  Capacity 115
  Formatting 115
  Inserting/removing 46
miniUIM 44
Mobile networks 99
Mobile networks (overseas) 164
mopera U 59
MyProfile 89
Name card 89
Navigation 148
Network Mode (overseas) 164
Network operators (overseas) 164
Network security code 112
Network services 90
Network (setting) 99
Notification icons 64
Notification lamp 109
Notification ringtone 108
Notifications panel 65
Nuisance call blocking service 97
Numeric keypad input 67
Opening/closing the external connector terminal cap 36
Options 167
Osaifu-Keitai 153
Osaifu-Keitai lock setting 155
Outgoing calls history 87
Part names and functions 42
PC Link 133
Phonebook 88
PhoneBookCopy 90
PIN1 code 112
PIN1 code entry setting 112
PIN setting 112
PIN unblocking key 113
Places 149
Playback
  Media Player 142
  Photos 141
  Videos 141
Precautions 7
Privacy (setting) 114
Profile 89
Program guide 152
Public mode (power off) 98
Purchasing (applications) 145
Quickoffice 159
QWERTY keyboard 66
Receiving a call 86

Receiving a call (overseas) 165
Receiving a call overseas 165
Receiving an international call 165
Related devices 167
Repositioning pages (Home screen) 74
Ringtone
Call 108
Email 121
Gmail 123
SMS 119
Ring volume 108
SAR (Specific Absorption Rate) 188
Screen
Brightness 108
Display orientation 54
Lock 54
Screen lock security 110
Screen timeout 109
Settings 108
Zooming in/zooming out 56
Search
Google search 82
Within web page 127
Search (setting) 115
Security codes 111
Security (setting) 111
Select Font 109
Settings menu 99
Shooting photos 140
Shooting videos 140
Silent mode 108
Sleep mode 54
Slide 55
SMS 118
Sound (setting) 108
Specific Absorption Rate (SAR) 188
sp-mode 59
sp-mode mail 118
Status bar 62
Status icons 63
Street View 148
Synchronize (setting) 113
T9 input 68
Tapping 55
Tap search 83
Task Manager 83
Time setting 117
Toggling entry modes (text) 67
ToruCa 155
Touch and hold 55
Touch panel operation 55
Trademarks 193
Troubleshooting 168
Turning power on/off 54
TV 149
TV Link 152
Uninstalling (applications) 76
Unlock security 110
Updating software 179
USB PC Link 134
USB tethering 105
Using overseas 161
Vibration
Email 121

Gmail 123
Incoming call 108
SMS 119
Voice Input & Output (setting) 116
Voice Mail service 93
Volume 108
VPN 106
Warranty 176
Waterproof/dustproof function 35
Widgets
List 80
Shortcuts 72
Wi-Fi settings 60, 100
Wi-Fi tethering 105
Wireless (setting) 99
WORLD CALL 85
WORLD WING 161

Numerals

1Seg 149
10-key keyboard 66

You can view/change your contract contents, subscribe to services, and request information materials on the Internet.

My docomo (http://www.mydocomo.com/) ⇒ 各種お申込・お手続き (Various Applications/Procedures) (in Japanese only)

* You need your docomo ID and password in order to access this page.
* If you do not have or you have forgotten your "docomo ID/password", contact "General Inquiries" at the last page of this manual.
* You may not be able to access the site depending on the content of your subscription.
* You may not be able to access the site due to system maintenance, etc.

Using mobile phone with good manners!

Please be considerate of others around you when using the terminal.

Always turn OFF the terminal in the following situations

■ In a place where the use of mobile phones is prohibited
Always turn off the terminal on an airplane and in a hospital.

* Please note that medical electrical equipment is also used in other parts of a hospital in addition to its wards. Always turn off the terminal in lobbies and waiting rooms as well.

■ When you are in a place where you may be near to people with implanted cardiac pacemakers or implanted defibrillators, such as in a crowded train
The terminal may exert a harmful effect on implanted cardiac pacemakers and implanted defibrillators.

Set the terminal to Public mode in the following situations

■ While driving
Using the mobile phone in your hand while driving is subject to punishment. However, this excludes situations when the use of a mobile phone is unavoidable, such as the rescue of the sick and injured or the maintenance of public safety.

■ When you are in a public place such as a theater, movie theater, or museum Using the terminal in a public place, where you need to be quiet, annoys people around you.

Be considerate of where you use the terminal and keep your voice and ringtone down

■ Keep your voice down when using the terminal in a quiet place such as a restaurant or hotel lobby.

■ If you are in an outdoor public place, make sure you do not disturb others.

Respect privacy

Please be considerate of the privacy of individuals around you when shooting and sending photos using camera-equipped mobile phones.

The following functions will help you to keep good manners in public

There are useful functions you can use to set the terminal not to answer incoming calls, and to silence all sounds.

■ Airplane mode: enables/disables the function to emit radio waves.→ P.100

■ Manner (Silent) mode: Silences the ringtone and other sounds from the terminal.→ P.108
* Note that you cannot silence the shutter sound.

■ Public mode (Power off): A message plays notifying callers that you are where you have to power off the phone and cannot answer, and the phone automatically hangs up.→ P.98

■ Vibrator: Notifies incoming calls by vibration. → P.108

Other optional services such as Voice Mail service (P.93) and Call Forwarding service (P.95) are also available.

Loss or theft of the terminal or payment of cumulative cost overseas <docomo Information Center>

(available 24 hours a day)

■ From DOCOMO mobile phones

International call access code for the country you stay **-81-3-6832-6600*(toll free)**

* You are charged a call fee to Japan when calling from a land-line phone, etc.

※ If you use N-05D, you should dial the number +81-3-6832-6600 (to enter '+', press and hold the '0' key for at least one second).

■ From land-line phones <Universal number>

Universal number international prefix **-8000120-0151***

* You might be charged a domestic call fee according to the call rate for the country you stay.

※ For international call access codes for major countries and universal number international prefix, refer to DOCOMO International Services website.

Failures encountered overseas <Network Support and Operation Center>

(available 24 hours a day)

■ From DOCOMO mobile phones

International call access code for the country you stay **-81-3-6718-1414* (toll free)**

* You are charged a call fee to Japan when calling from a land-line phone, etc.

※ If you use N-05D, you should dial the number +81-3-6718-1414 (to enter '+', press and hold the '0' key for at least one second).

■ From land-line phones <Universal number>

Universal number international prefix **-8005931-8600***

*You might be charged a domestic call fee according to the call rate for the country you stay.

※ For international call access codes for major countries and universal number international prefix, refer to DOCOMO International Services website.

- **If you lose the terminal or have it stolen, immediately take the steps necessary for suspending the use of the terminal.**
- **If the terminal you purchased is damaged, bring the terminal to a repair counter specified by DOCOMO after returning to Japan.**

Bring unwanted mobile phones to your nearest DOCOMO shop as we collect both our own products and those of competitors.

* Collectable goods: mobile phones, PHS, battery packs, chargers, desktop holders (we collect both our own products and those of competitors)

General Inquiries <docomo Information Center>

0120-005-250 (toll free)

* Service available in: English, Portuguese, Chinese, Spanish, Korean.
* Unavailable from part of IP phones.

(Business hours : 9:00 a.m. to 8:00 p.m.)

■ **From DOCOMO mobile phones** (In Japanese only)

(No prefix) 151 (toll free)

* Unavailable from land-line phones, etc.

■ **From land-line phones** (In Japanese only)

0120-800-000 (toll free)

* Unavailable from part of IP phones.

(Business hours : 9:00 a.m. to 8:00 p.m. (open all year round))

Repairs

■ **From DOCOMO mobile phones** (In Japanese only)

(No prefix) 113 (toll free)

* Unavailable from land-line phones, etc.

■ **From land-line phones** (In Japanese only)

0120-800-000 (toll free)

* Unavailable from part of IP phones.

(Business hours : 24 hours (open all year round))

- Please confirm the phone number before you dial.
- For Applications or Repairs and After-Sales Service, please contact the above-mentioned information center or the docomo shop etc. near you on the NTT DOCOMO website.

  NTT DOCOMO website http://www.nttdocomo.co.jp/english/

Inquiries regarding samples <NEC Mobiling information center>

■ **From land-line phones**

0120-102001

■ **From mobile phones**

0570-064919

*Calls are not accepted from PHS. Call from a land-line phone/mobile phone

Business hours : Weekdays 9:00 a.m. to 12:00 p.m.
1:00 p.m. to 5:00 p.m.
(Except Saturdays/Sundays/holidays/designated NEC holidays)

- Please confirm the phone number before you dial.
- Check this manual for information on samples.

Don't forget your mobile phone … or your manners!
When using your mobile phone in a public place, don't forget to show common courtesy and consideration for others around you.

Li-ion00

Sales: NTT DOCOMO, INC.
Manufacturer: NEC CASIO Mobile Communications, Ltd.

2012.2 (1st Edition)