MOTOROLA CONFIDENTIAL PROPRIETARY

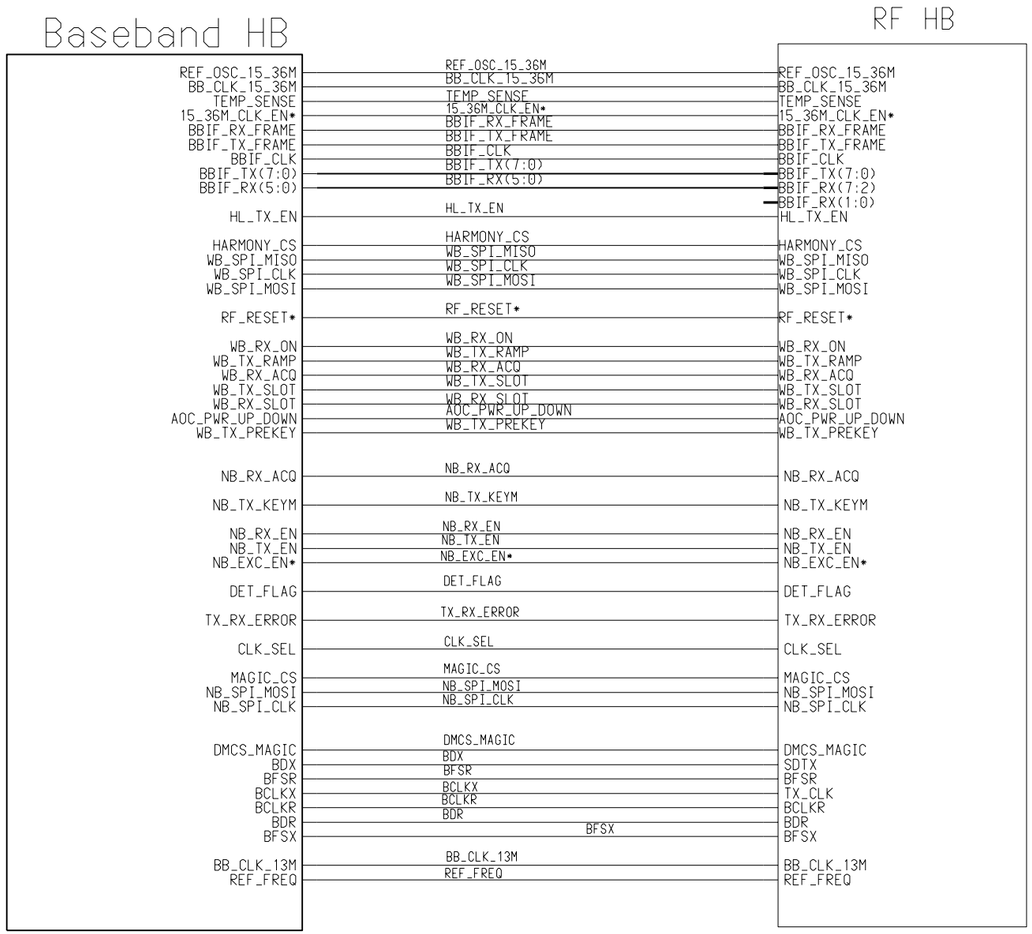

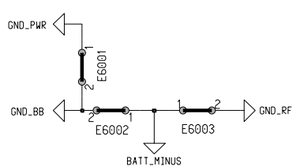

Engineer: John Kerr	MOTOROLA INC.
Drawn by: John Kerr	
R&D CHK:	TITLE: Paragon
DOC CTRL CHK:	Size: 11x17
MFG CTRL CHK:	Top Level
QA CHK:	REV: / Drawing Number: / Page: / Of:
Changed by: w14184	Date: Thursday, November 1, 2001 / Time: 11:17:40 am

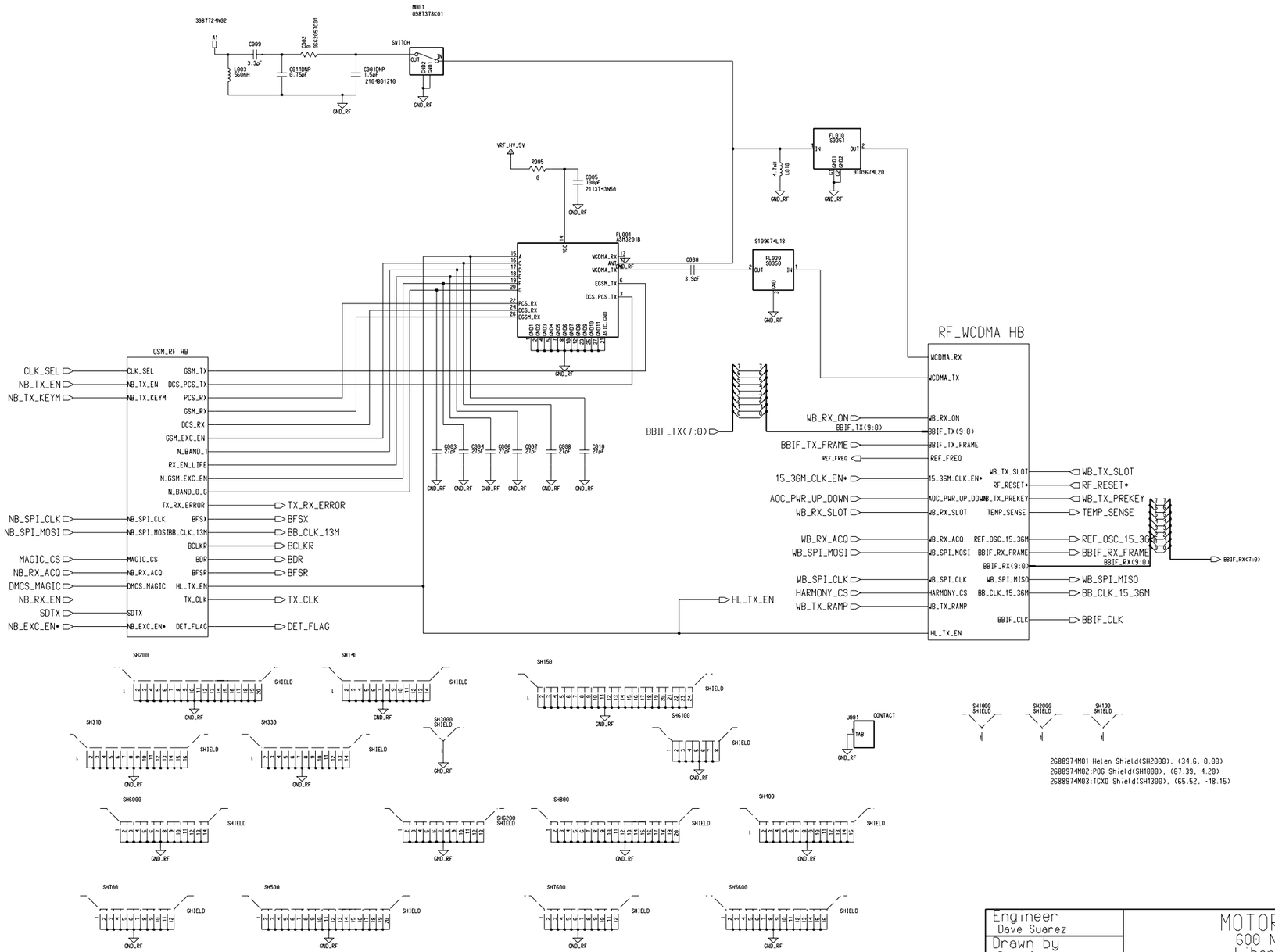

Changed by Dave Suarez	Date Changed Friday, April 20, 2001	Time 3:59:05 pm	QA CHK	REV	Drawing Number / Sheet of

Engineer Dave Suarez	MOTOROLA INC. 600 N US HWY 45 Libertyville, IL
Drawn by Dave Suarez	
R&D CHK	TITLE: RF_TOP — Size: D
DOC CTRL CHK	
MFG CTRL CHK	

Band Select Circuits REF # 900-925

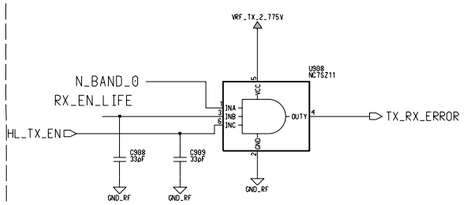

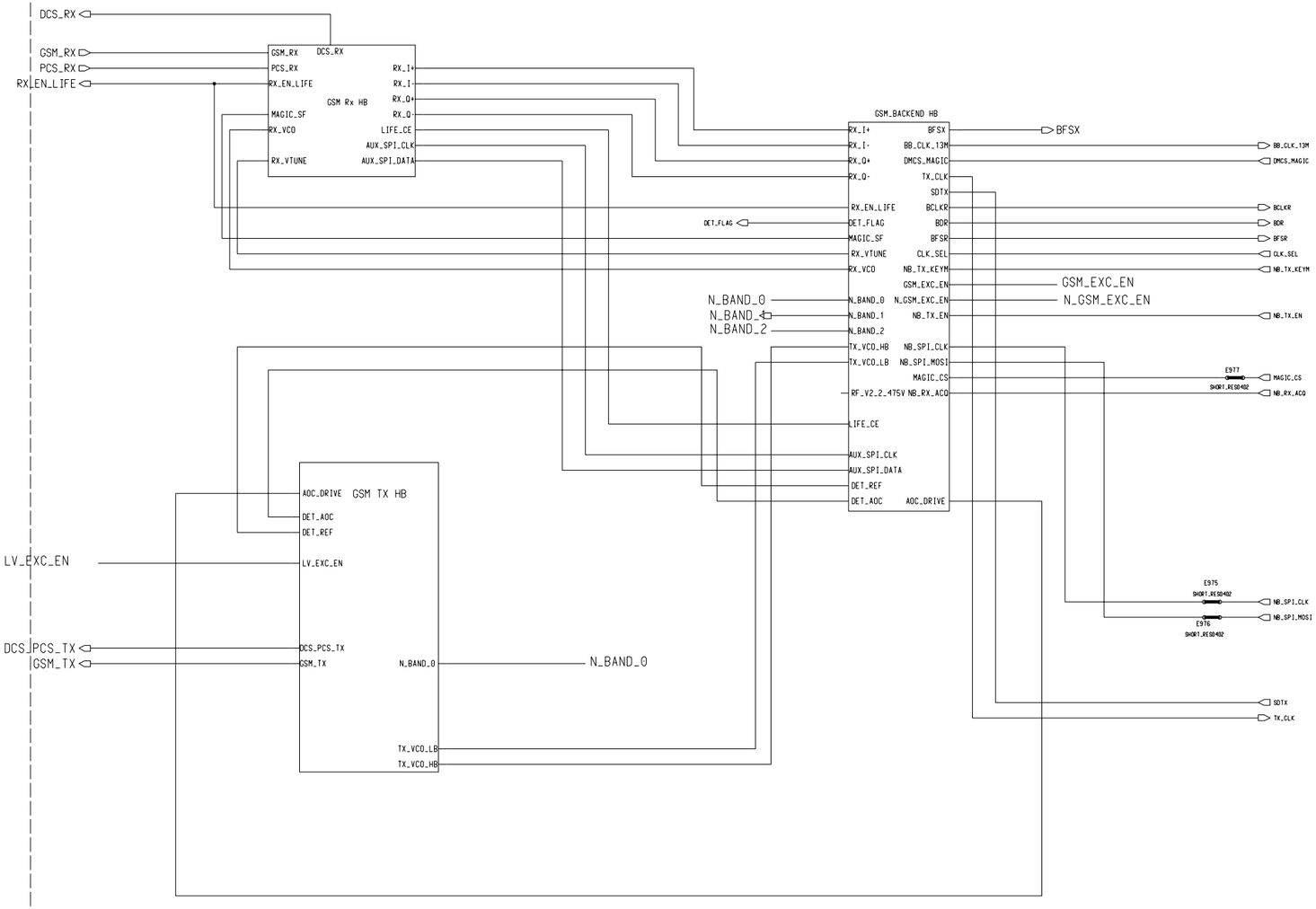

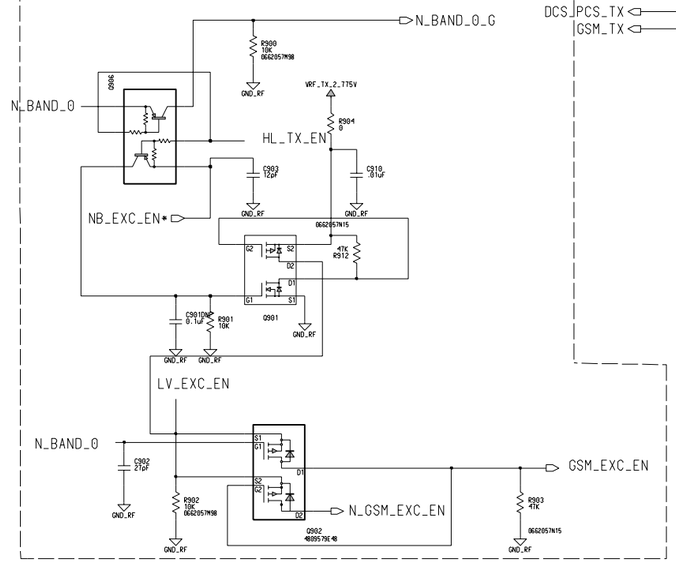

Changed by Dave Suarez	Date Changed Tuesday, May 1, 2001	Time 11:34:44 am	QA CHK	REV	Drawing Number	Sheet of	

Engineer Dave Suarez	MOTOROLA INC. 600 N US HWY 45 Libertyville, IL
Drawn by Dave Suarez	
R&D CHK	TITLE GSM_TOP — Size D
DOC CTRL CHK	
MFG CTRL CHK	

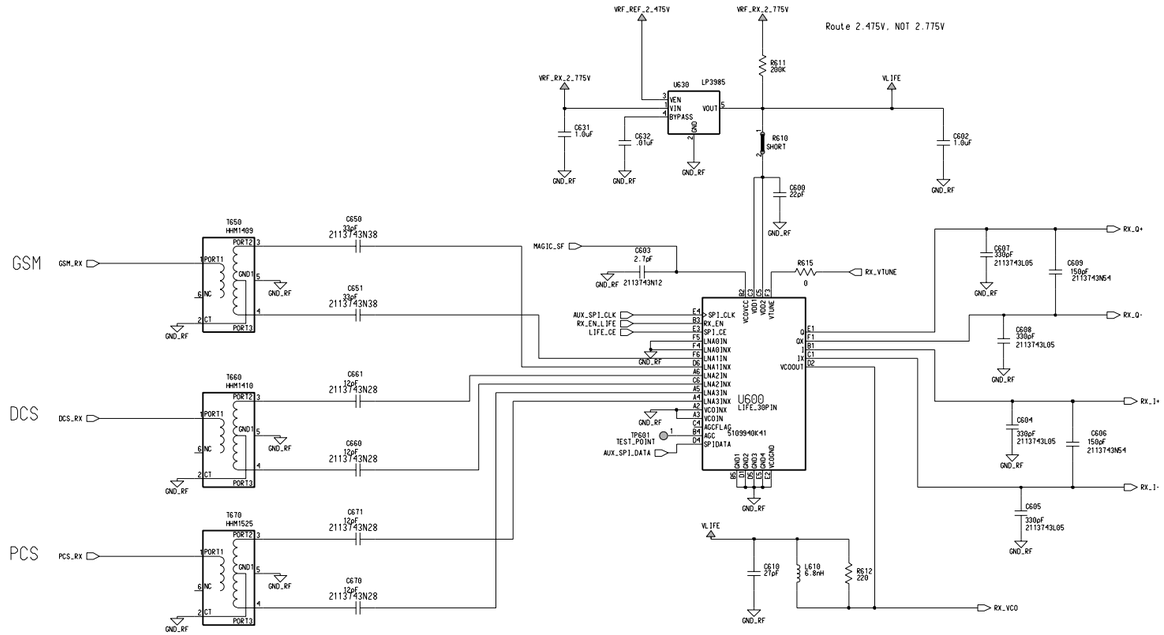

LIFE IC
REF # 600-649

RX FRONT END FILTERS REF # 650-699

Changed by Dave Suarez	Date Changed Tuesday, May 1, 2001	Time 5:06:46 pm	QA CHK	REV	Drawing Number	Sheet of	

Engineer Brian Elfers	MOTOROLA INC. 600 N US HWY 45 Libertyville, IL
Drawn by Brian Elfers	
R&D CHK	TITLE GSM_Rx — Size D
DOC CTRL CHK	
MFG CTRL CHK	

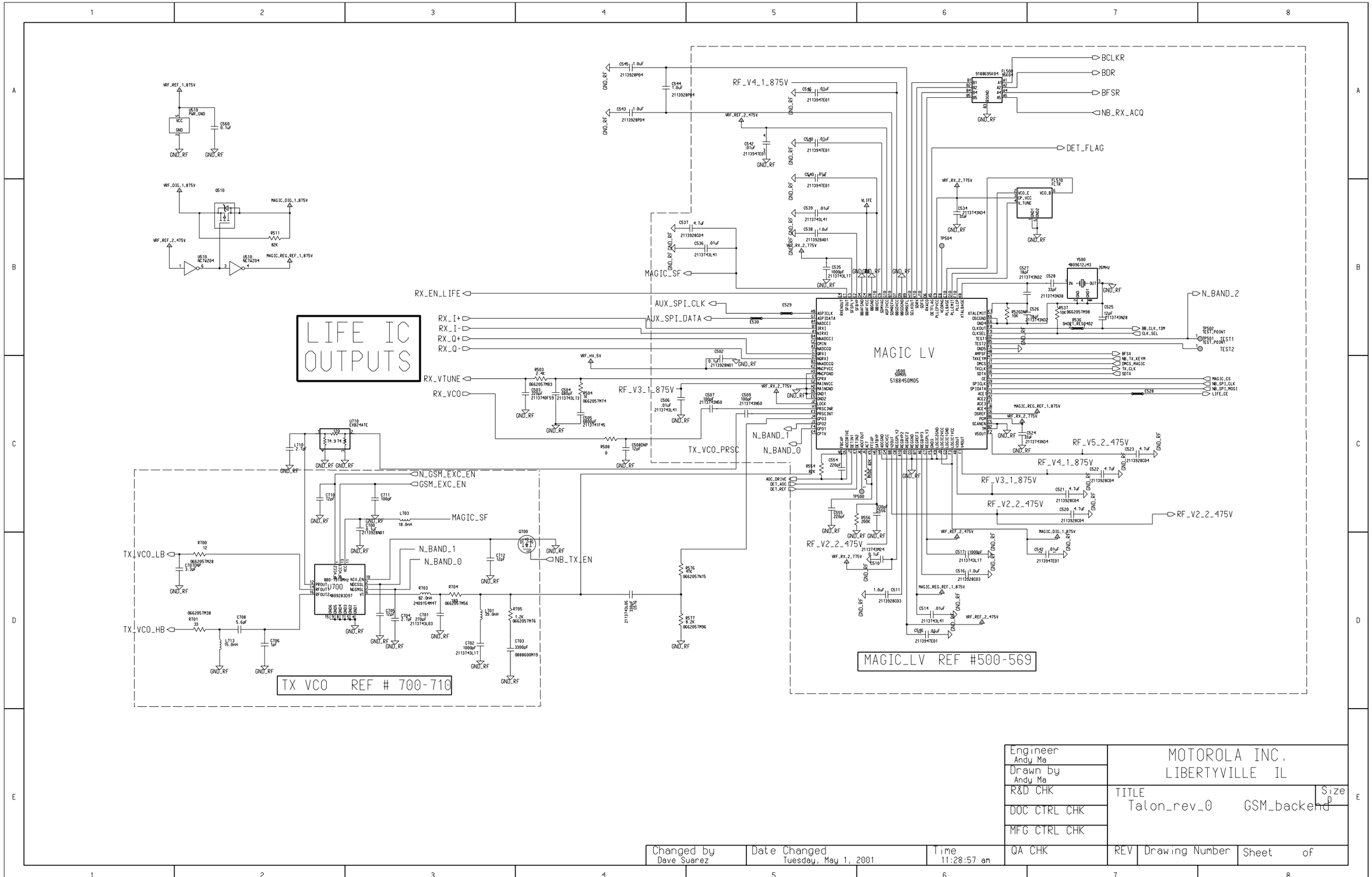

Engineer Andy Ma	MOTOROLA INC. LIBERTYVILLE IL		
Drawn by Andy Ma			
R&D CHK	TITLE Talon_rev_0 GSM_backend		Size D
DOC CTRL CHK			
MFG CTRL CHK			
QA CHK	REV	Drawing Number	Sheet of

Changed by	Date Changed	Time
Dave Suarez	Tuesday, May 1, 2001	11:28:57 am

GSM Transmitter

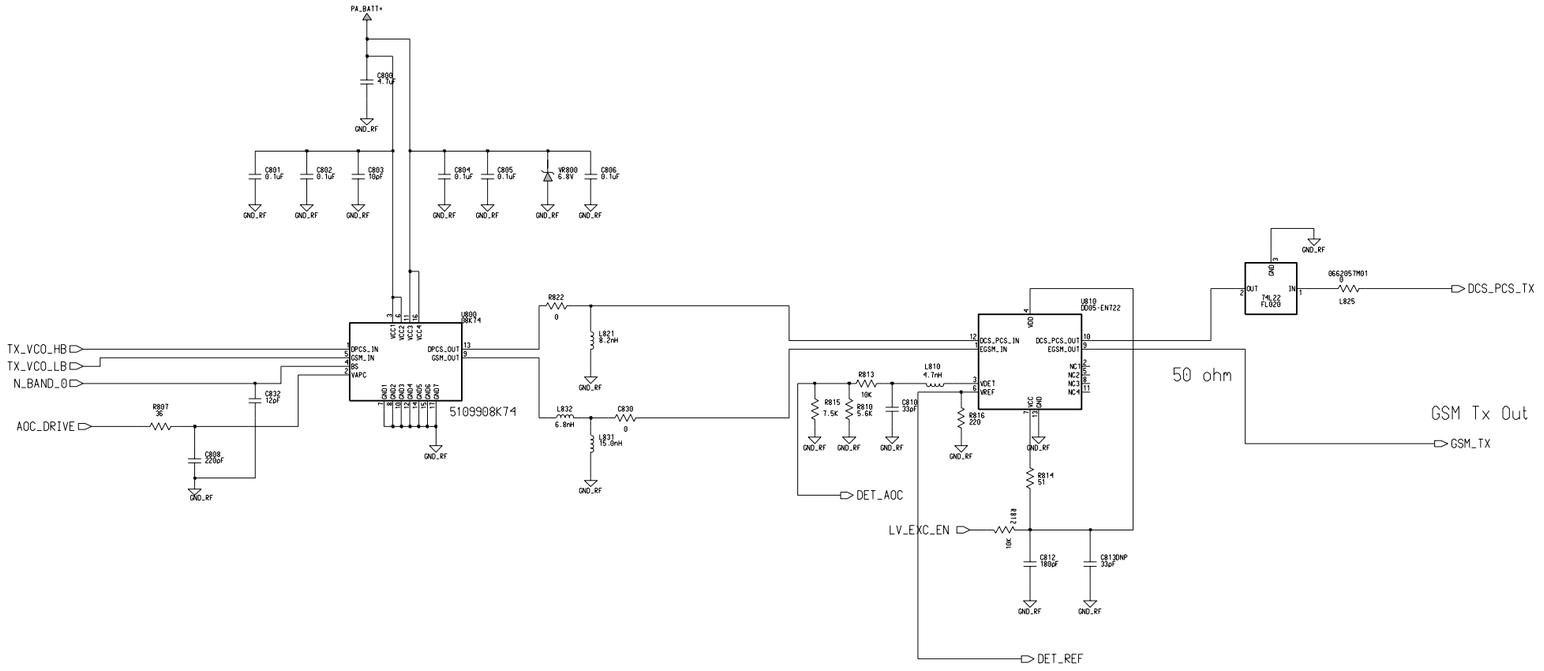

Engineer: Paul Manente	MOTOROLA INC. 600 N US HWY 45 Libertyville, IL		
Drawn by: Paul Manente			
R&D CHK	TITLE: GSM_TX_D GSM_Transmitter	Size: D	
DOC CTRL CHK			
MFG CTRL CHK			
QA CHK	REV	Drawing Number	Sheet of

Changed by	Date Changed	Time
Dave Suarez	Tuesday, May 1, 2001	12:33:12 pm

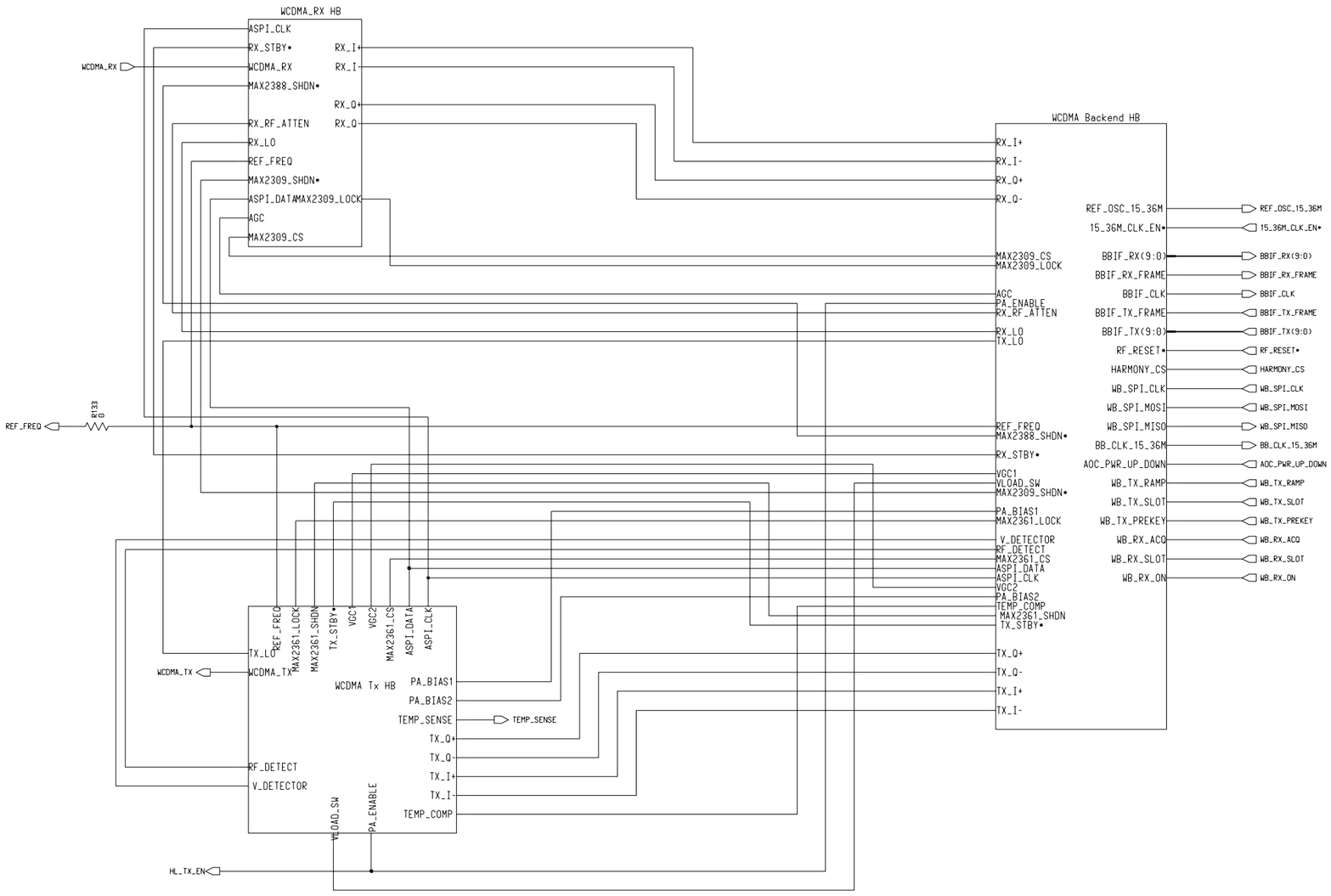

Changed by wjs023	Date Changed Saturday, February 9, 2002	Time Changed 2:33:44 pm	QA CHK	REV	Drawing Number	Sheet of

Engineer wjs023	MOTOROLA INC. 600 N US HWY 45 Libertyville, IL
Drawn by wjs023	
R&D CHK	TITLE RF_WCDMA Paragon — Size C
DOC CTRL CHK	
MFG ENGR CHK	

MOTOROLA INTERNAL USE ONLY

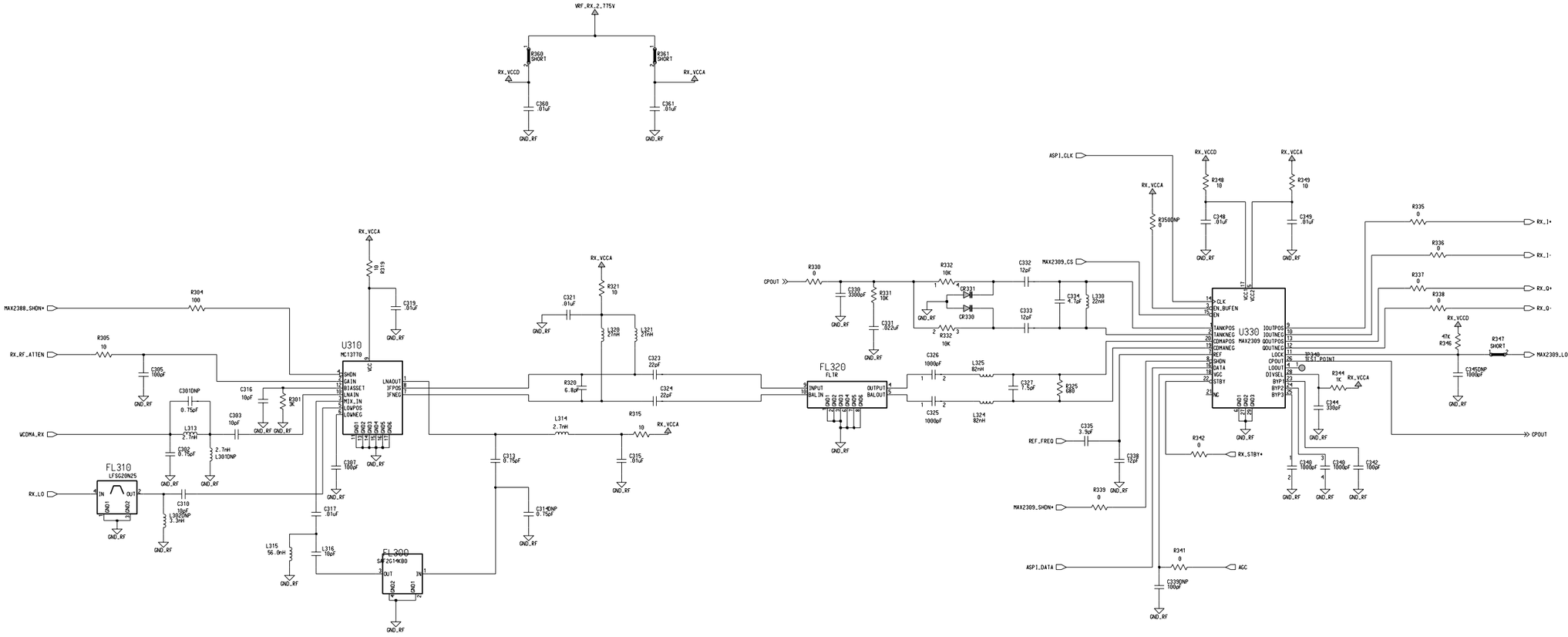

Engineer: Randy Wiessner	MOTOROLA INC
Drawn by: Randy Wiessner	
R&D CHK:	TITLE: Morris WCDMA_Rx
DOC CTRL CHK:	Size: D
MFG CTRL CHK:	
QA CHK: D	REV: Drawing Number: Page: OF:
Changed by: Randy Wiessner	Date: Thursday, March 22, 2001 Time: 3:10:36 pm

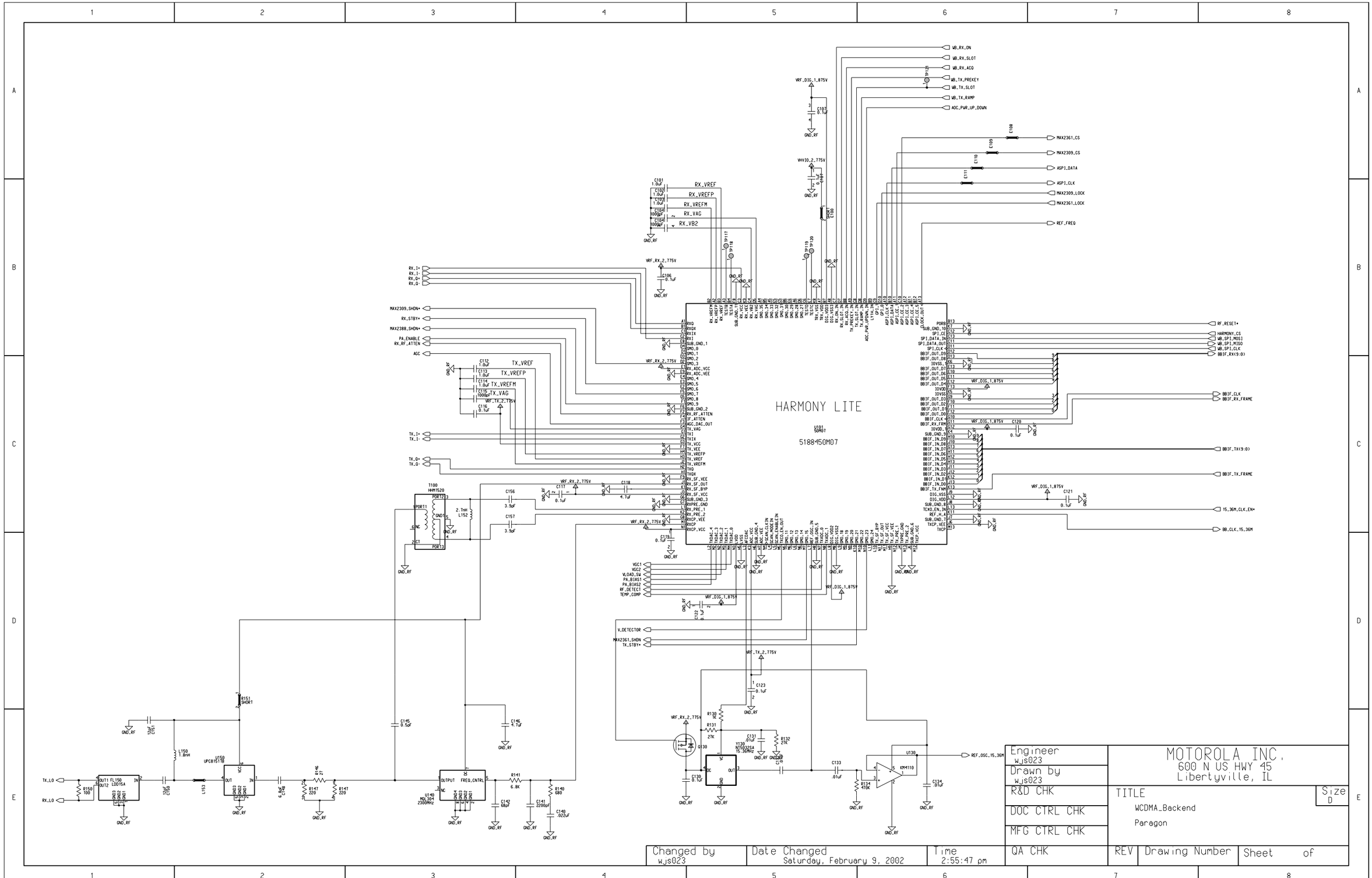

Engineer wjs023	MOTOROLA INC. 600 N US HWY 45 Libertyville, IL		
Drawn by wjs023			
R&D CHK	TITLE WCDMA_Backend Paragon		Size D
DOC CTRL CHK			
MFG CTRL CHK			
QA CHK	REV	Drawing Number	Sheet of

Changed by	Date Changed	Time
wjs023	Saturday, February 9, 2002	2:55:47 pm

Un-used ports

Attenuator and interstage filter 410 - 414

Power Amplifier 420 - 449

Quadrature modulator and upmixer 200-299

Engineer: John Mura	COMPANY NAME Address City
Drawn by: John Mura	
R&D CHK	TITLE: WCDMA_Tx
DOC CTRL CHK	Size: D
MFG CTRL CHK	
Changed by: Dave Suarez	Date Changed: Thursday, March 29, 2001
Time: 4:39:58 pm	QA CHK
REV	Drawing Number
Sheet 1 of 1	

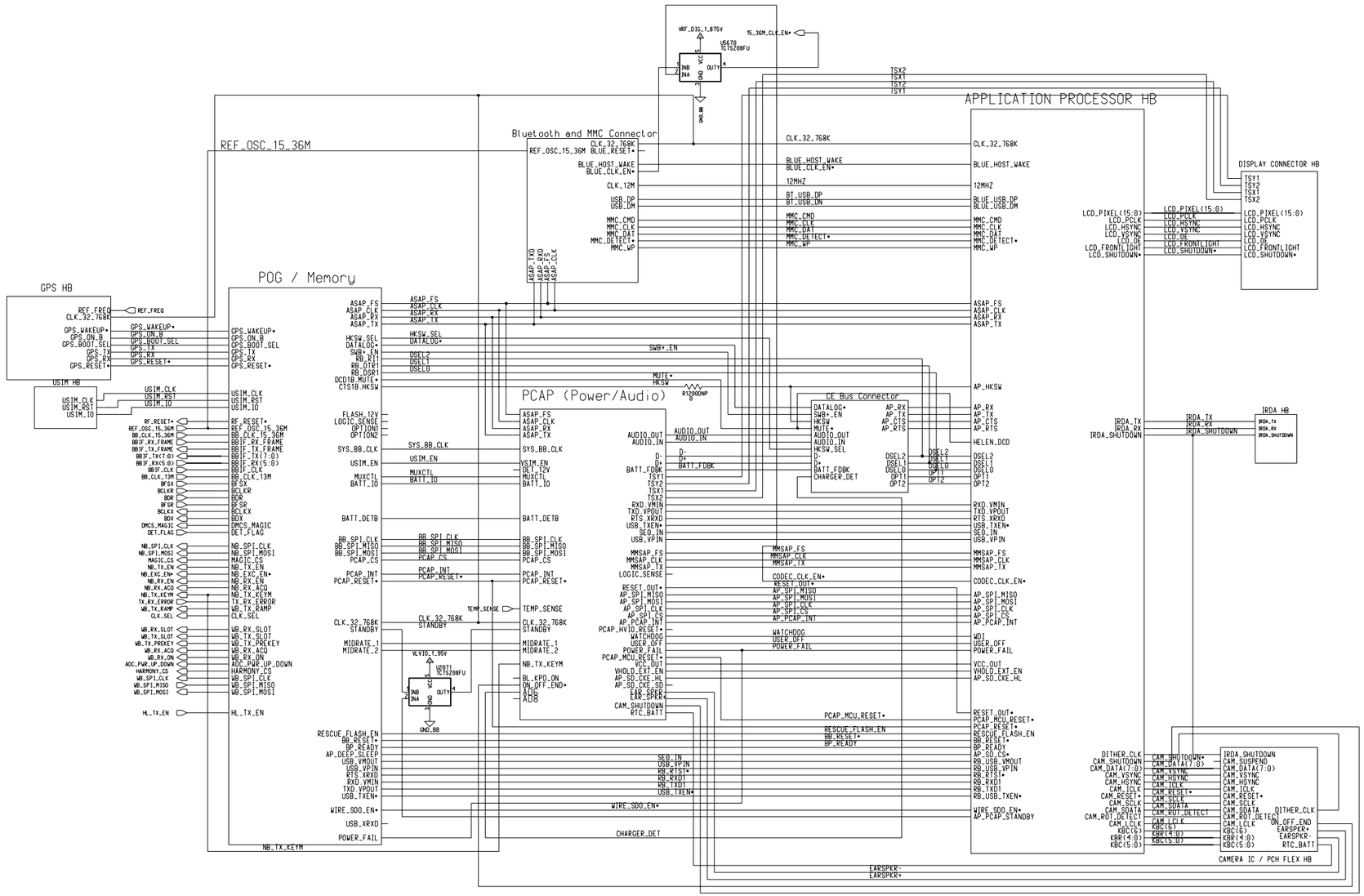

Engineer wjs023	MOTOROLA INC. 600 N US HWY 45 Libertyville, IL		
Drawn by wjs023			
R&D CHK	TITLE BB_TOP Paragon	Size D	
DOC CTRL CHK			
MFG CTRL CHK			
Changed by wjs023	Date Changed Saturday, February 9, 2002	Time 3:40:29 pm	QA CHK
REV	Drawing Number	Sheet of	

K.Abe : Added GPS_ON_B signal — Feb 25 2003
: Added R1200DNP for JTAG connection — Mar 01 2003

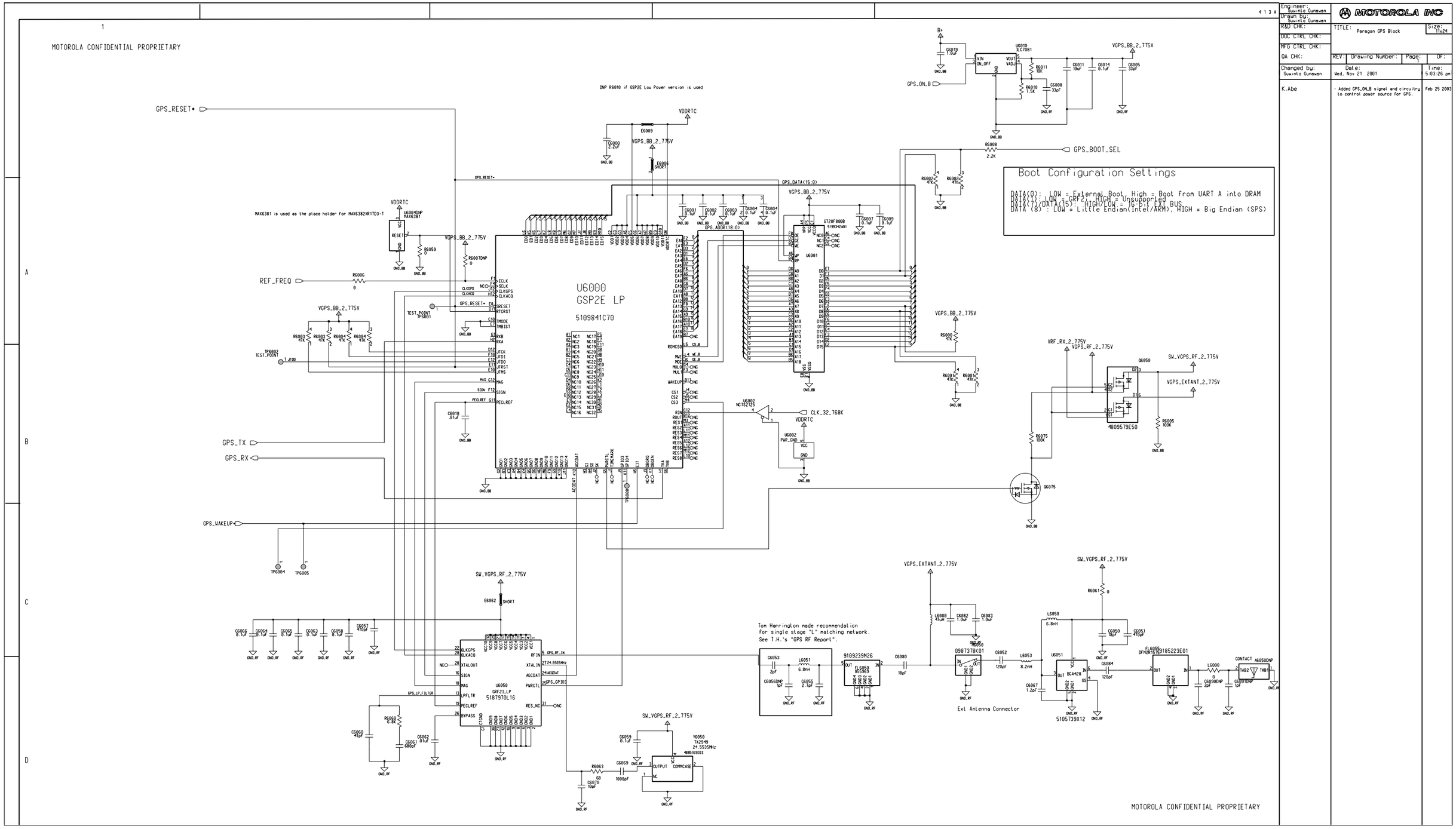

Engineer: Suwinto Gunawan	MOTOROLA INC	
Drawn by: Suwinto Gunawan		
R&D CHK:	TITLE: Paragon GPS Block	Size: 11x24
DOC CTRL CHK:		
MFG CTRL CHK:		
QA CHK:	REV: Drawing Number: Page: 1 Of:	
Changed by: Suwinto Gunawan	Date: Wed, Nov 21 2001	Time: 5:03:26 pm
K.Abe	- Added GPS_ON_B signal and circuitry to control power source for GPS.	Feb 25 2003

J5500

VSIMC

C5506

0.1uF

GND_BB

C5503

33pF

GND_RF

USIM_RST

R5500

0

C5504

33pF

GND_RF

C5509DNP

0.1uF

USIM_CLK

R5503

0

C5505

33pF

GND_RF

C1 C1
C2 C2
C3 C3
C5 C5
C6 C6
C7 C7

C5507

GND_BB

C5508

33pF

0.1uF

GND_RF

R5502

0

VSIMC

R5501

5.6K

USIM_IO

C5501

33pF

GND_RF

VR5500

15KV

C3 A3 C1 A1

B2

MOTOROLA CONFIDENTIAL PROPRIETARY

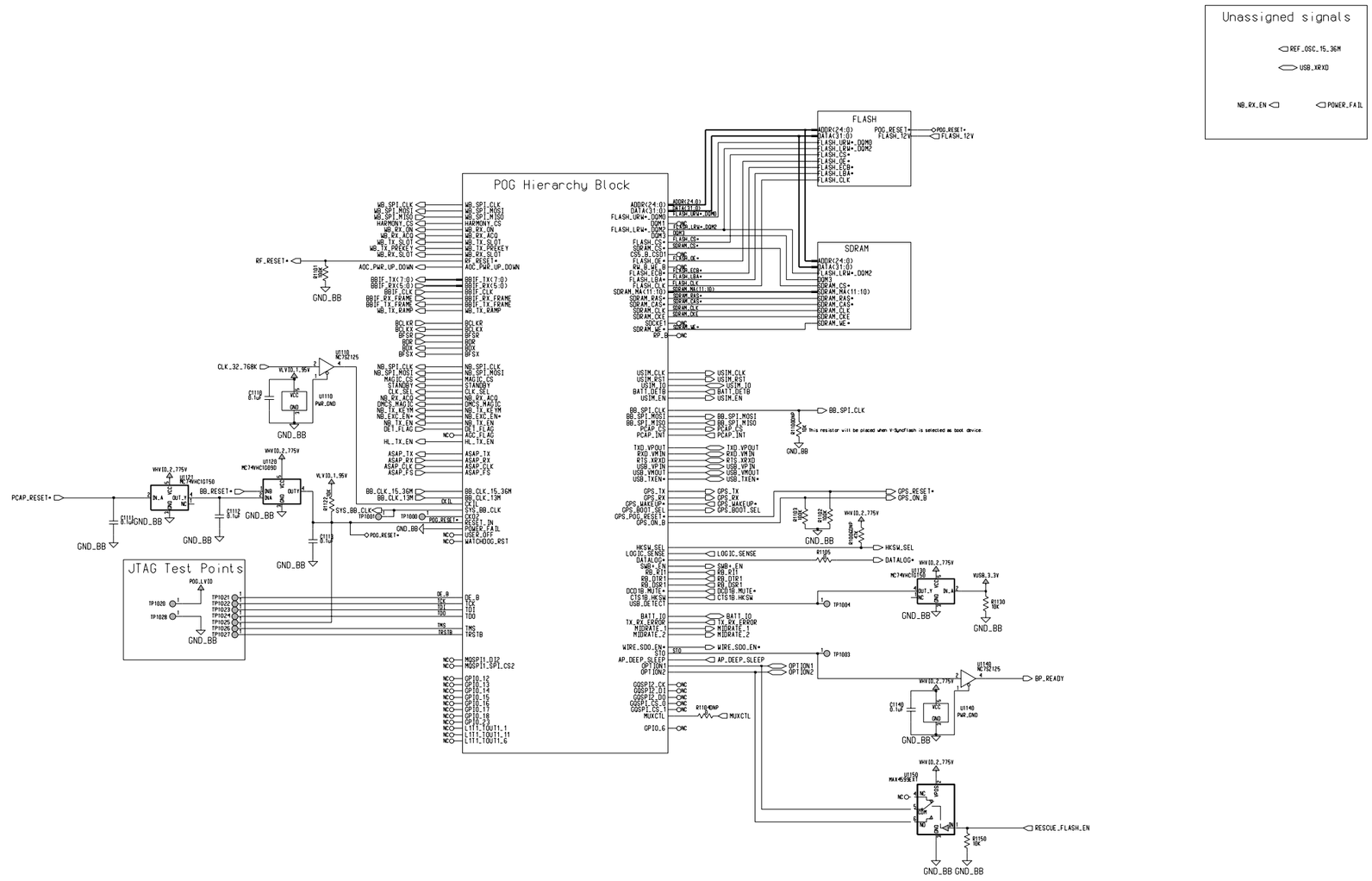

Engineer: Kenyu Abe	MOTOROLA INC	
Drawn by: Kenyu Abe		
R&D CHK:	TITLE: Paragon 1.5 POG Main	Size:
DOC CTRL CHK:		
MFG CTRL CHK:		
QA CHK:	REV: Drawing Number: Page: Of:	
Changed by: kabe	Date: Friday, May 31, 2002	Time: 11:24:34 am

K.Abe	- Updated from pRb to pRb	Sep 24 2002
K.Abe	- Connected USB_DETECT signal - Placed a 0ohm place holder for MUXCTL signal	Oct 05 2002
K.Abe	- Changed reset circuitry	Oct 24 2002
K.Abe	- Assigned GPS_ON_B signal to GPIO_9	Jan 20 2003
K.Abe	- Moved level shifter for PCAP_RESET+ from PCAP section.	Feb 13 2003
K.Abe	- Changed TP2040 to POG_LVIO - Added pull-down resistor to GPS_ON_B.	Feb 25 2003
K.Abe	- Adde R1005 and R1006DNP for JTAG communication	Mar 01 2003
K.Abe	- Removed GPS_TIME_SYNC signal	Apr 04 2003

MOTOROLA CONFIDENTIAL PROPRIETARY

Engineer: Kenyu Abe	MOTOROLA INC.
Drawn by: Kenyu Abe	
R&D CHK:	TITLE: Paragon 1.5 POG FLASH — Size:
DOC CTRL CHK:	
MFG CTRL CHK:	
QA CHK:	REV: — Drawing Number: — Page: — Of:
Changed by: kabe	Date: Friday, May 31, 2002 — Time: 11:24:34 am

K.Abe - Removed R1302DNP **Mar 31 2003**

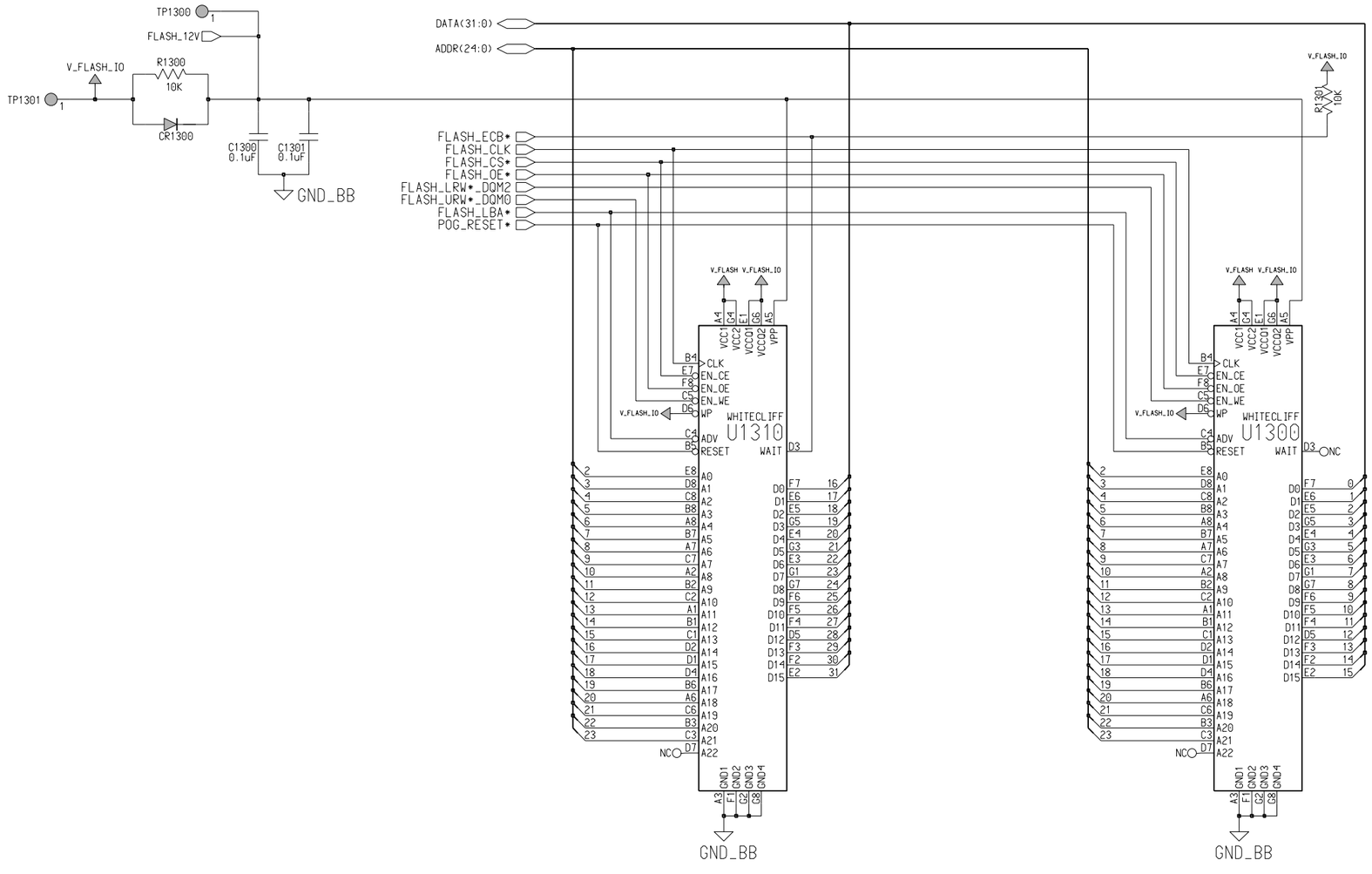

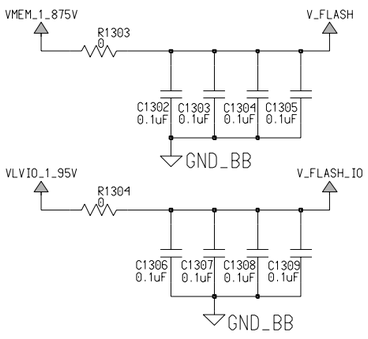

MOTOROLA CONFIDENTIAL PROPRIETARY

Engineer: Kenyu Abe	MOTOROLA INC.
Drawn by: Kenyu Abe	
R&D CHK:	TITLE: Paragon 1.5 POG SDRAM — Size:
DOC CTRL CHK:	
MFG CTRL CHK:	
QA CHK:	REV: — Drawing Number: — Page: — Of:
Changed by: kabe	Date: Friday, May 31, 2002 — Time: 11:24:34 am

K.Abe - Removed C1402.C1403, C1406 and C1407 — **Jan 29 2003**
- Added jumpers to select SDRAM size

K.Abe - Configured SDRAM as 64Mbit — **Mar 01 2003**

K.Abe - Updated SDRAM part to 510950A55 — **Mar 25 2003**
- Removed jumpers for 128Mbit part configuration

64Mbit configuration

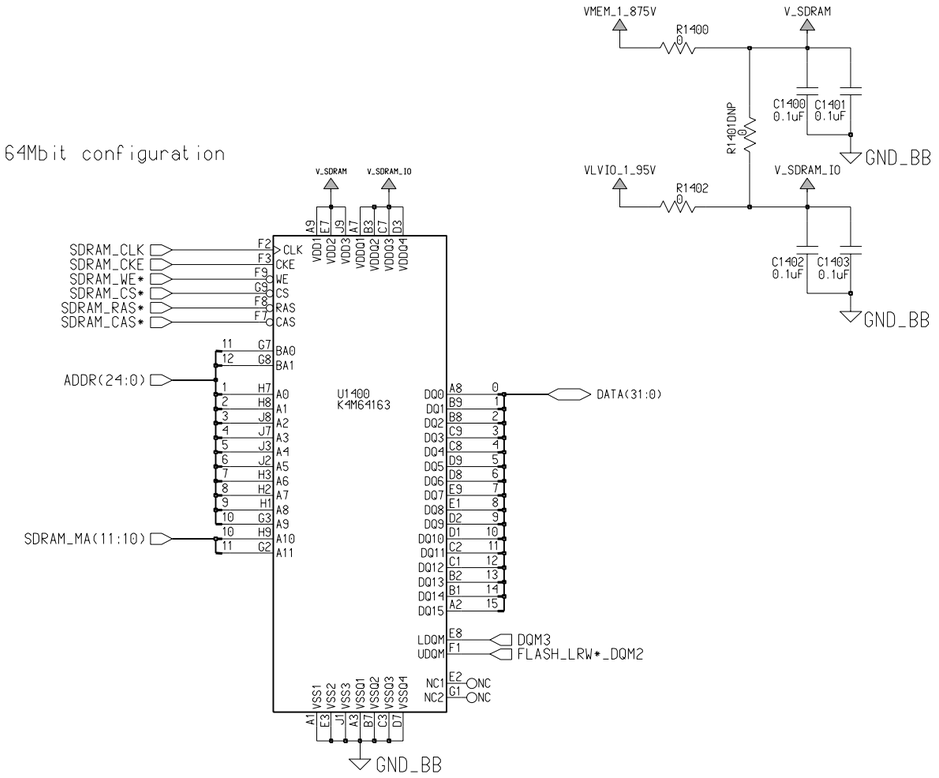

SDRAM size / BA Connection	IAM=0(Non-Interleaved)	
	4Mx16	8Mx16
BA0	SDBA0(ADDR11)	SDBA1(ADDR12)
BA1	SDBA1(ADDR12)	SDBA2(ADDR13)

MOTOROLA CONFIDENTIAL PROPRIETARY

4 1 3 A

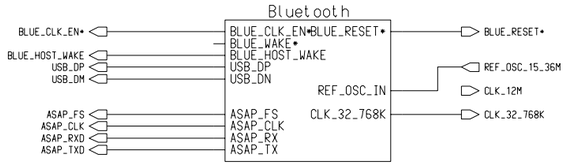

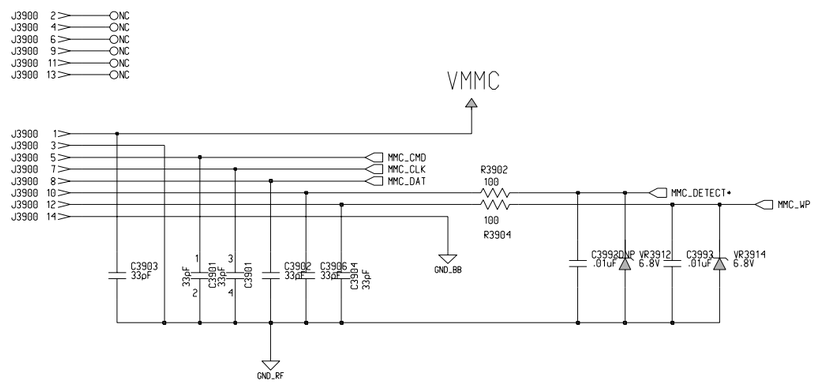

Engineer: John S. Kerr	MOTOROLA INC.
Drawn by: John S. Kerr	
R&D CHK:	TITLE: TALON USIM/BT Board Connector
DOC CTRL CHK:	Size: 11x21
MFG CTRL CHK:	
QA CHK:	REV: 1 | Drawing Number: | Page: 1 | OF: 1
Changed by: John Kerr	Date: Wednesday, August 8, 2001 | Time: 4:43:54 pm

MOTOROLA CONFIDENTIAL PROPRIETARY

Engineer: John Kerr	MOTOROLA INC.
Drawn by:	
R&D CHK:	TITLE: Bluetooth — Size:
DOC CTRL CHK:	
MFG CTRL CHK:	
QA CHK:	REV: — Drawing Number: — Page: — Of:
Changed by: John Kerr	Date: November 1, 2001 — Time:

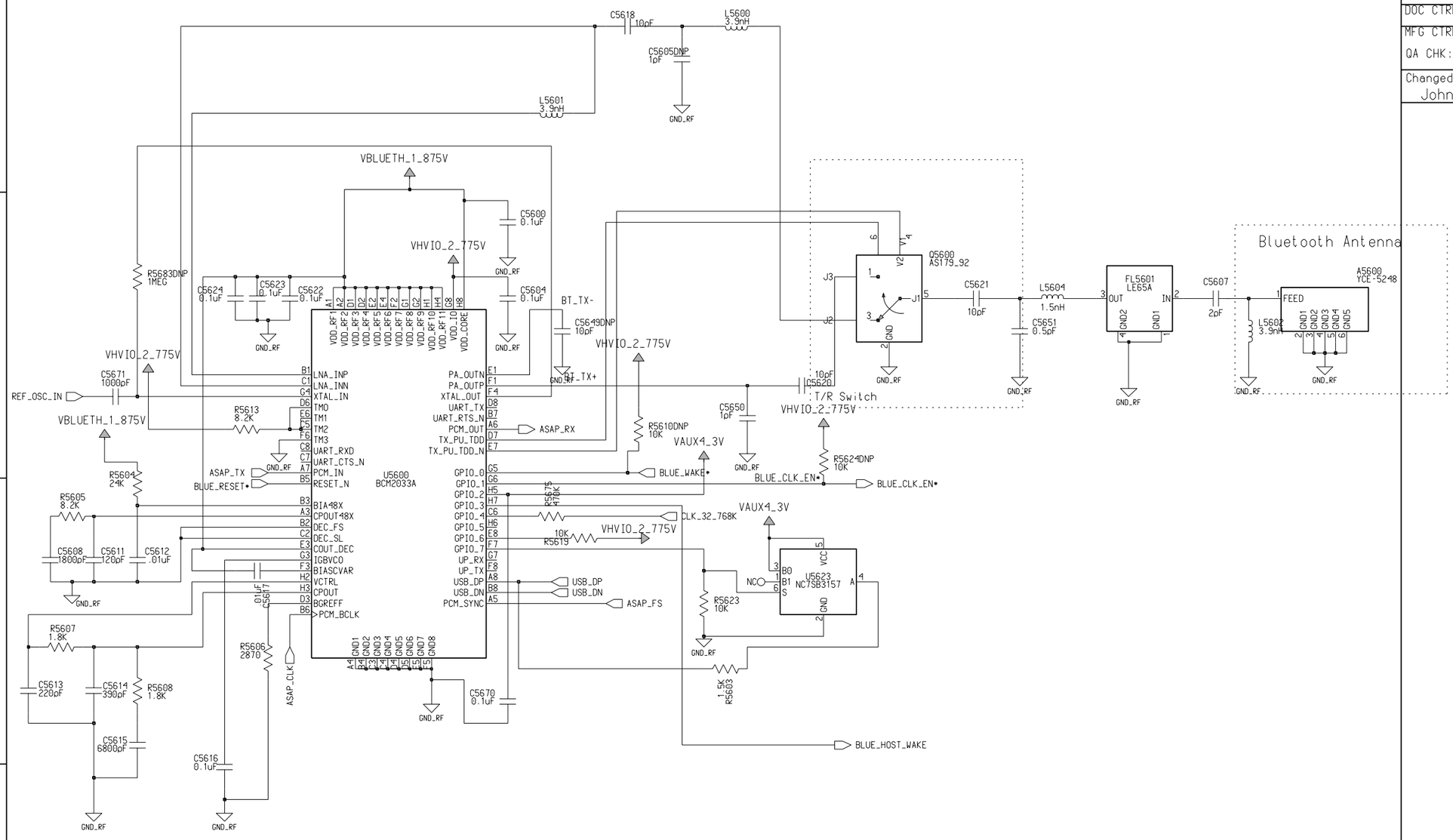

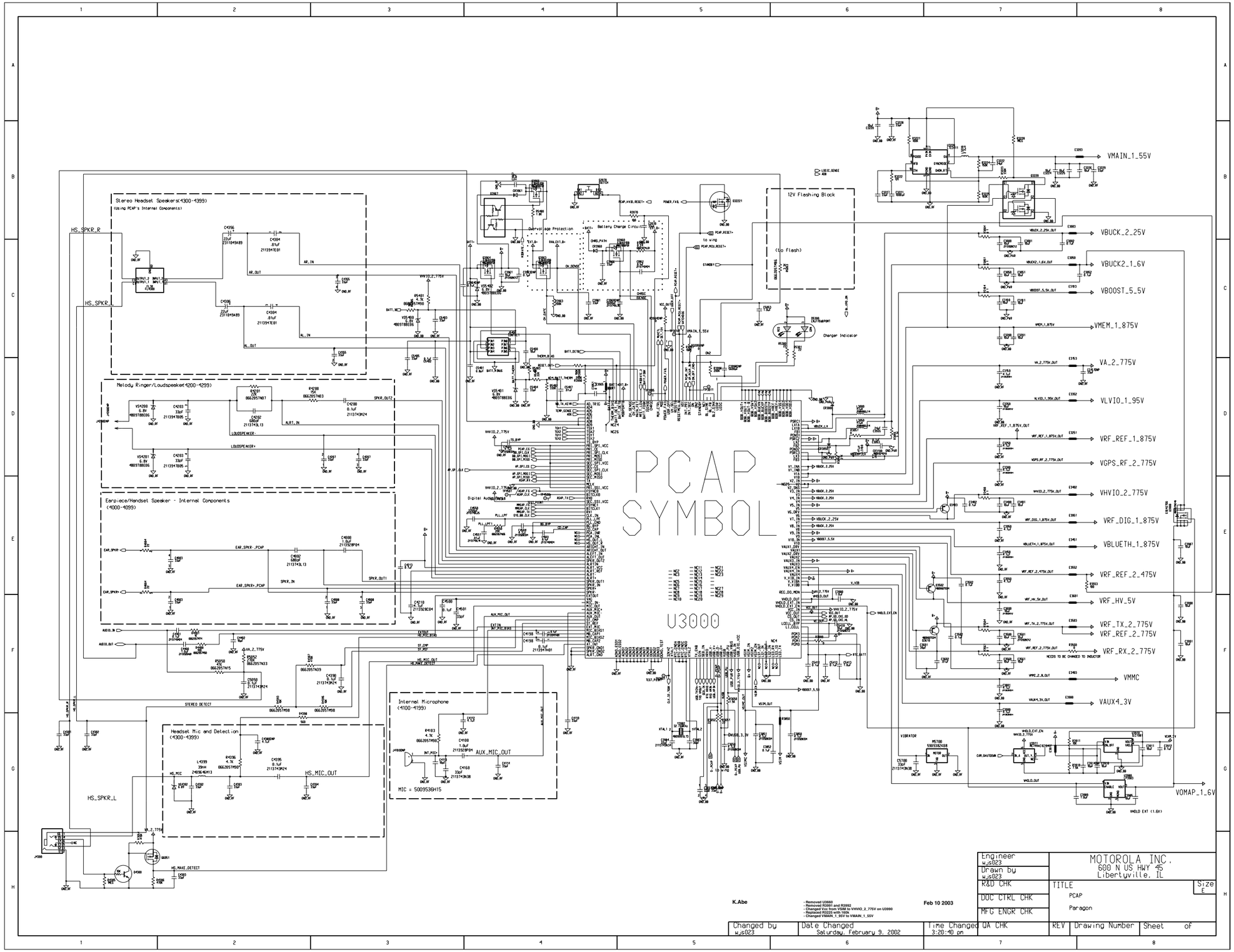

Engineer wjs023	MOTOROLA INC. 600 N US HWY 45 Libertyville, IL				
Drawn by wjs023					
R&D CHK	TITLE PCAP Paragon				Size E
DOC CTRL CHK					
MFG ENGR CHK					
Changed by wjs023	Date Changed Saturday, February 9, 2002	Time Changed 3:20:40 pm	QA CHK	REV	Drawing Number	Sheet of

K.Abe

- Removed U3660
- Removed R3991 and R3992
- Changed Vcc from VSIM to VHVIO_2_775V on U3990
- Replaced R3225 with 160k
- Changed VMAIN_1_95V to VMAIN_1_55V

Feb 10 2003

MOTOROLA CONFIDENTIAL PROPRIETARY

Accessory Connector
CE Connector (0987636K05)

J5000

Engineer: John Kerr	MOTOROLA INC.	
Drawn by:		
R&D CHK:	TITLE: PARAGON CE Accessory Connector	Size:
DOC CTRL CHK:		
MFG CTRL CHK:		
QA CHK:	REV: / Drawing Number: / Page: / Of:	
Changed by: John S. Kerr	Date: 11/01/01	Time:
11/01/01	Changed bypass ground on Audio IN/OUT from BB to GND_RF.	

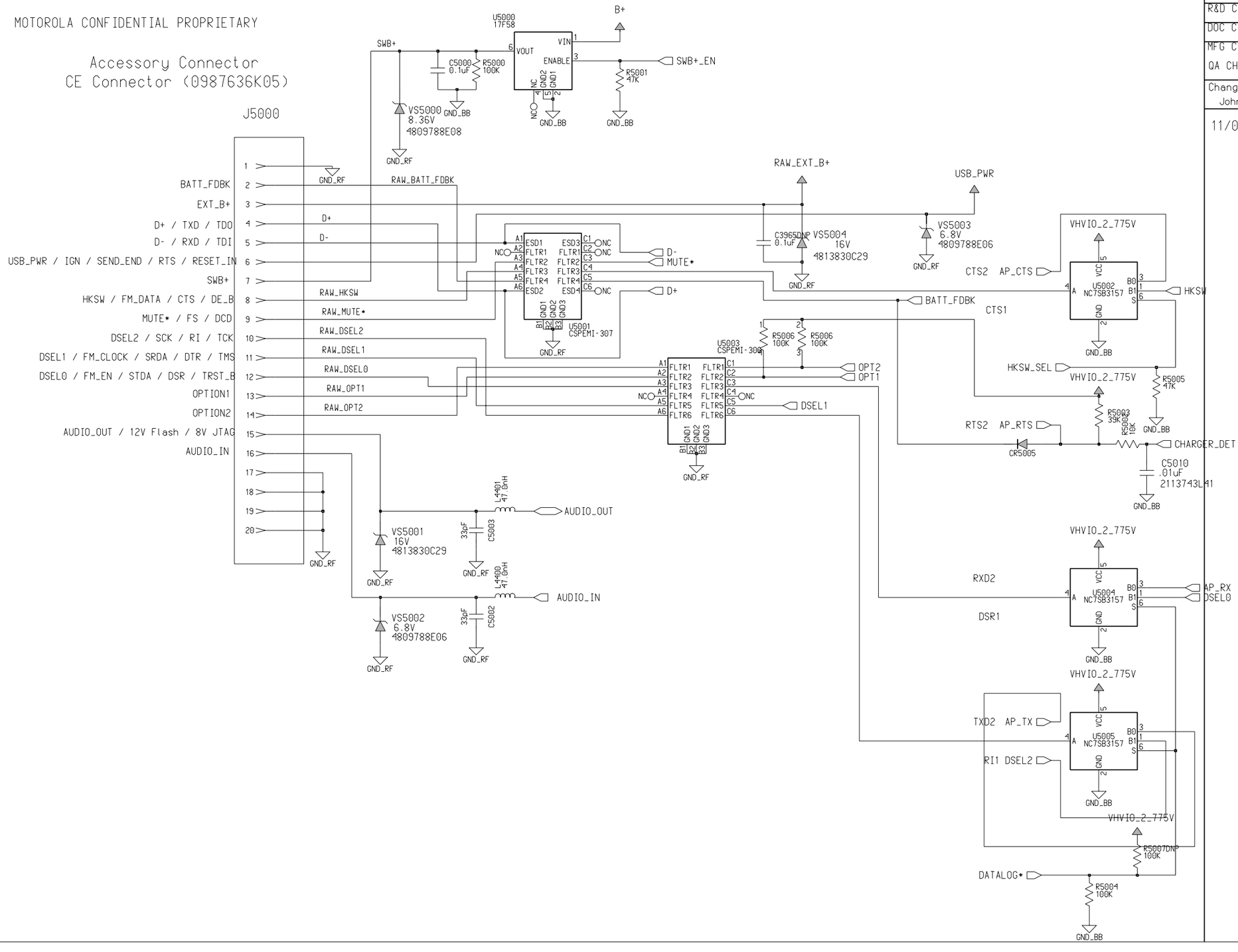

K.Abe - Replaced Flash(CS1) with 256Mbit part. Apr 04 2003

HELEN

Flash Interface

JTAG

JTAG Test Points

MCBSP1

uWIRE

SDRAM Interface

MMC

MCSI2

MCSI1

UART1

UART2

UART3 (GigaUART)

Engineer: John Fitzsimons	MOTOROLA INC.		
Drawn by: John Fitzsimons			
R&D CHK:	Title: Display Connector		Size: 11x17
DOC CTRL CHK:			
MFG CTRL CHK: 0			
QA CHK: w14184	REV: 1	Drawing Number: 1	Page: Of:
Changed by:	Date: Friday, September 14, 2001		Time: 1:10:28 pm

4 1 3 A

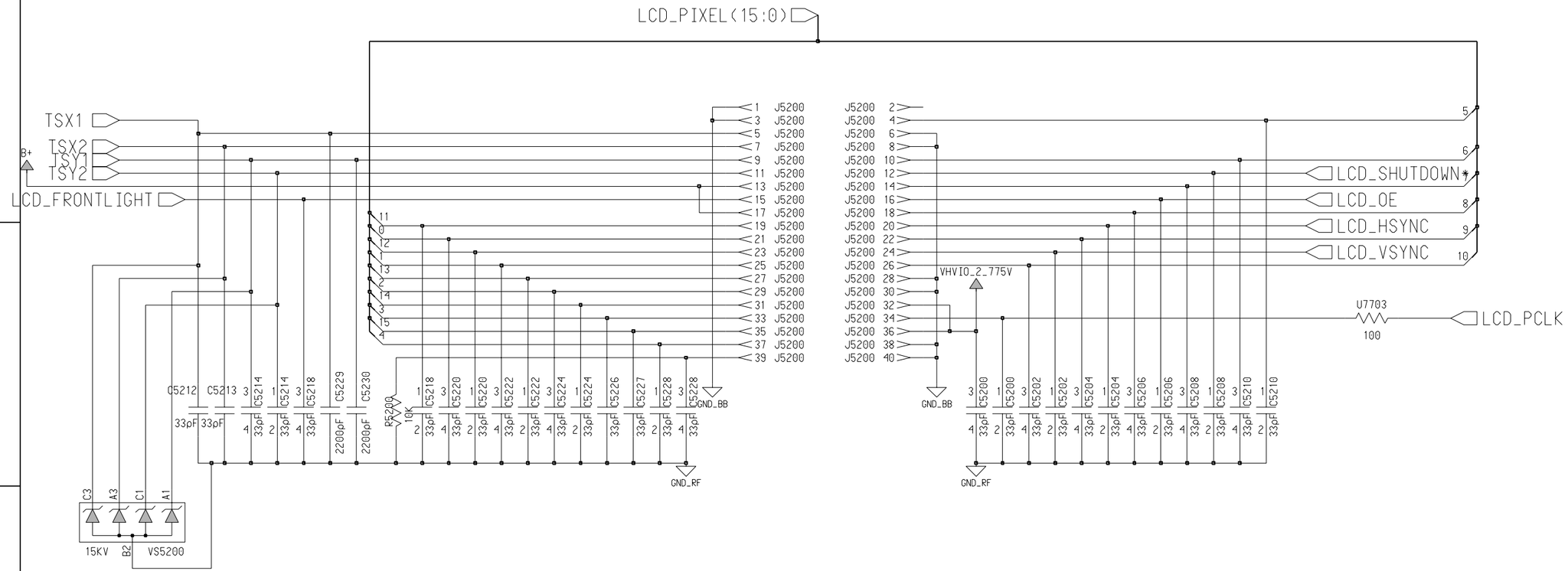

MOTOROLA INTERNAL USE ONLY

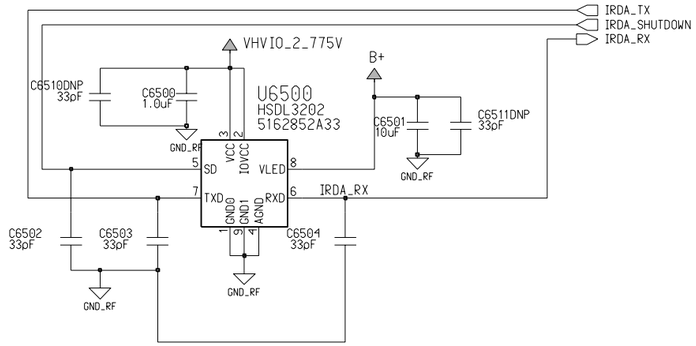

Engineer:	MOTOROLA INC.		
Drawn by:			
R&D CHK:	TITLE:		Size:
DOC CTRL CHK:			
MFG CTRL CHK:			
QA CHK:	REV:	Drawing Number: Page:	Of:
Changed by:	Date:		Time:

VIDEO
REF DES 7600-7699

0987817K04

U7600
Conexant BEP IC
CX11646-21
51-89251LO1

KEYPAD

U7701
CSPEM1-306

U7702
CSPEM1-306

VOICE
SPEAKER
VOL_UP
VOL_DOWN

Engineer	wjs023
Drawn by	wjs023
R&D CHK	
DOC CTRL CHK	
MFG CTRL CHK	
QA CHK	

MOTOROLA INC.
600 N US HWY 45
Libertyville, IL

TITLE
MCHFLEX
Paragon

Size D

Changed by	Date Changed	Time	REV	Drawing Number	Sheet of
wjs023	Saturday, February 9, 2002	3:58:15 pm			

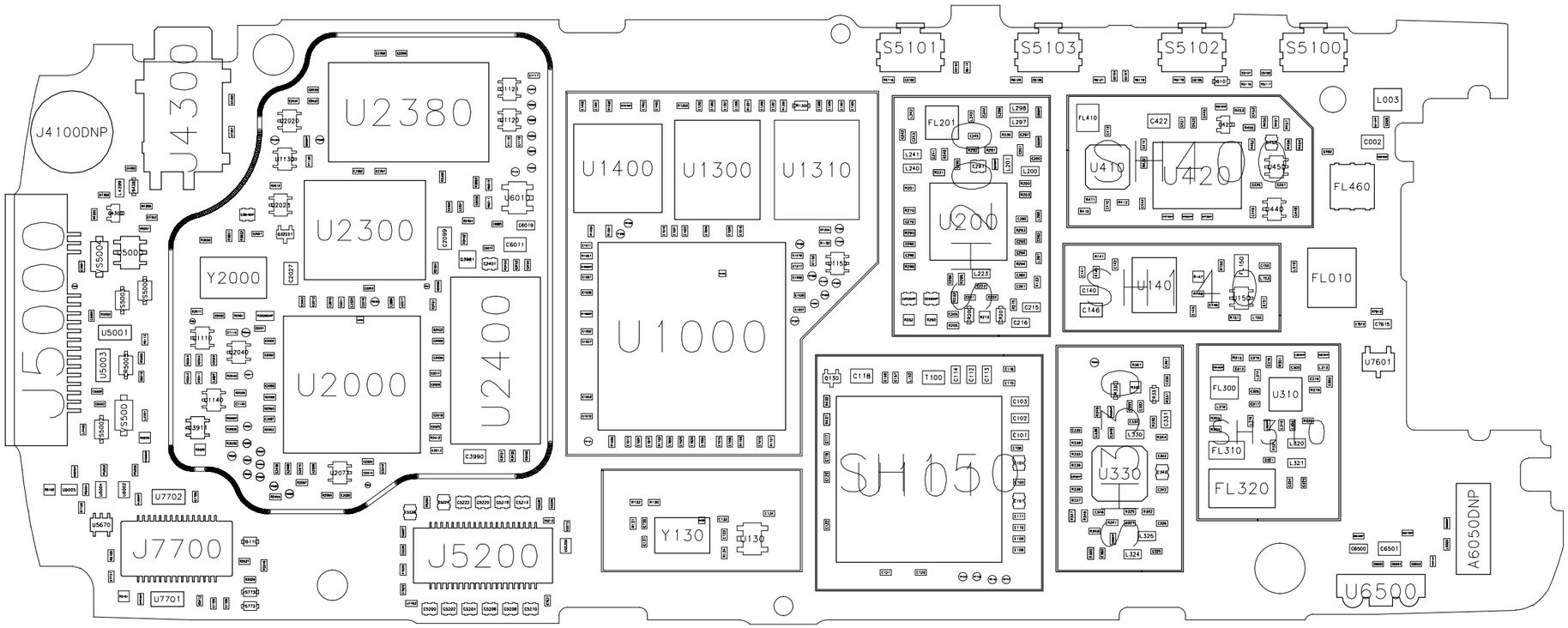

J4100DNP
J4300
J5000
U2380
U2300
U2000
U2400
Y2000
U1400
U1300
U1310
U1000
Y130
J5200
J7700
U7702
U7701
S5101
S5103
S5102
S5100
FL201
U200
U410
U420
FL460
U140
FL010
U7601
U330
FL300
U310
FL310
FL320
U6500
A6050DNP

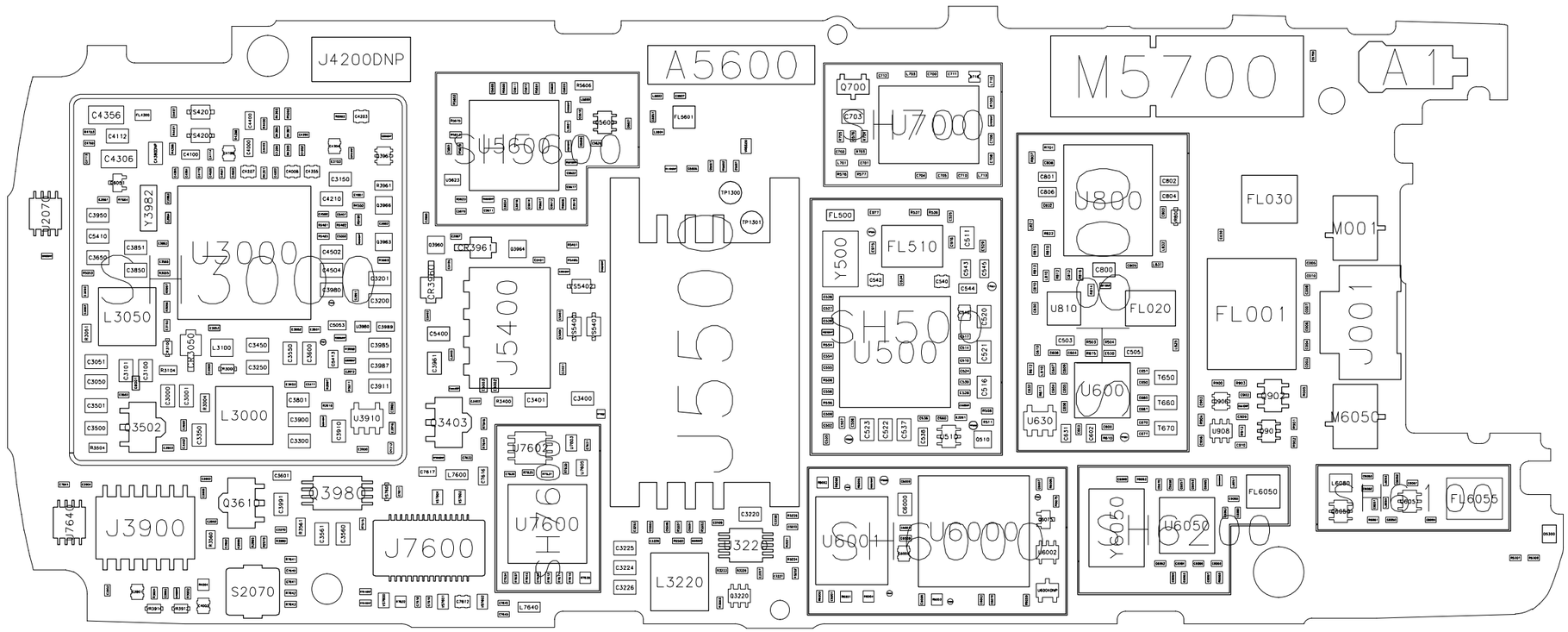
J4200DNP
A5600
M5700
A1
U3000
L3000
L3050
U5400
U7600
J7600
J3900
S2070
L3220
U5000
U6000
U6050
U6200
U7000
U800
U600
U630
U810
FL510
FL020
FL001
FL030
FL6050
FL6055
M001
J001
M6050