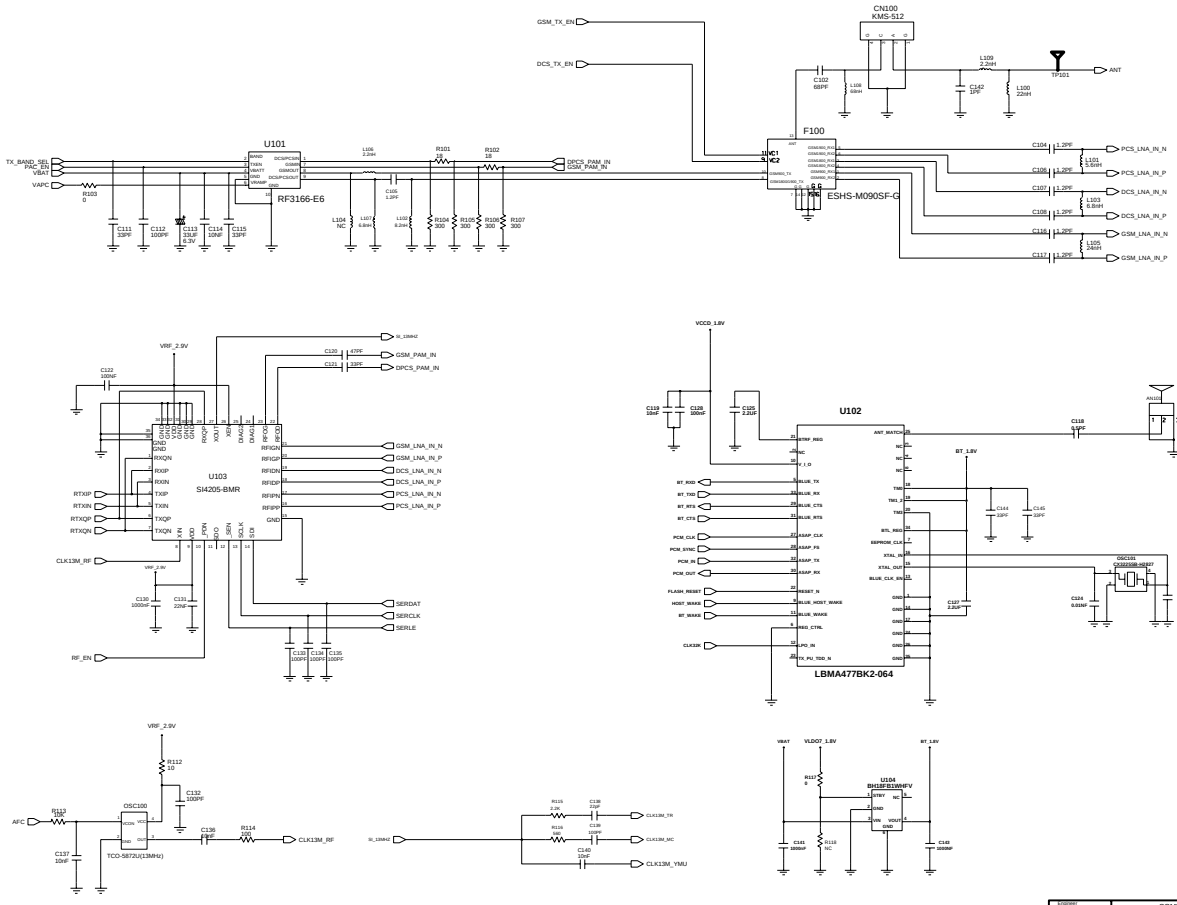


| | | | |
|---|---|---|---|
| Engineer: NAME | COMPANY NAME<br>Address<br>City | | |
| Drawn by: NAME | | | |
| R&D CHK | TITLE | | SGH-X800 REV 1.0 |
| DOC CTRL CHK | | | |
| BP LABORATORY CHK | | | |
| QA CHK | REV 1.0 | Drawing Number | Sheet 1 of 5 |

Changed by: admin | Date Changed: 2005.08.24 | Time Changed:

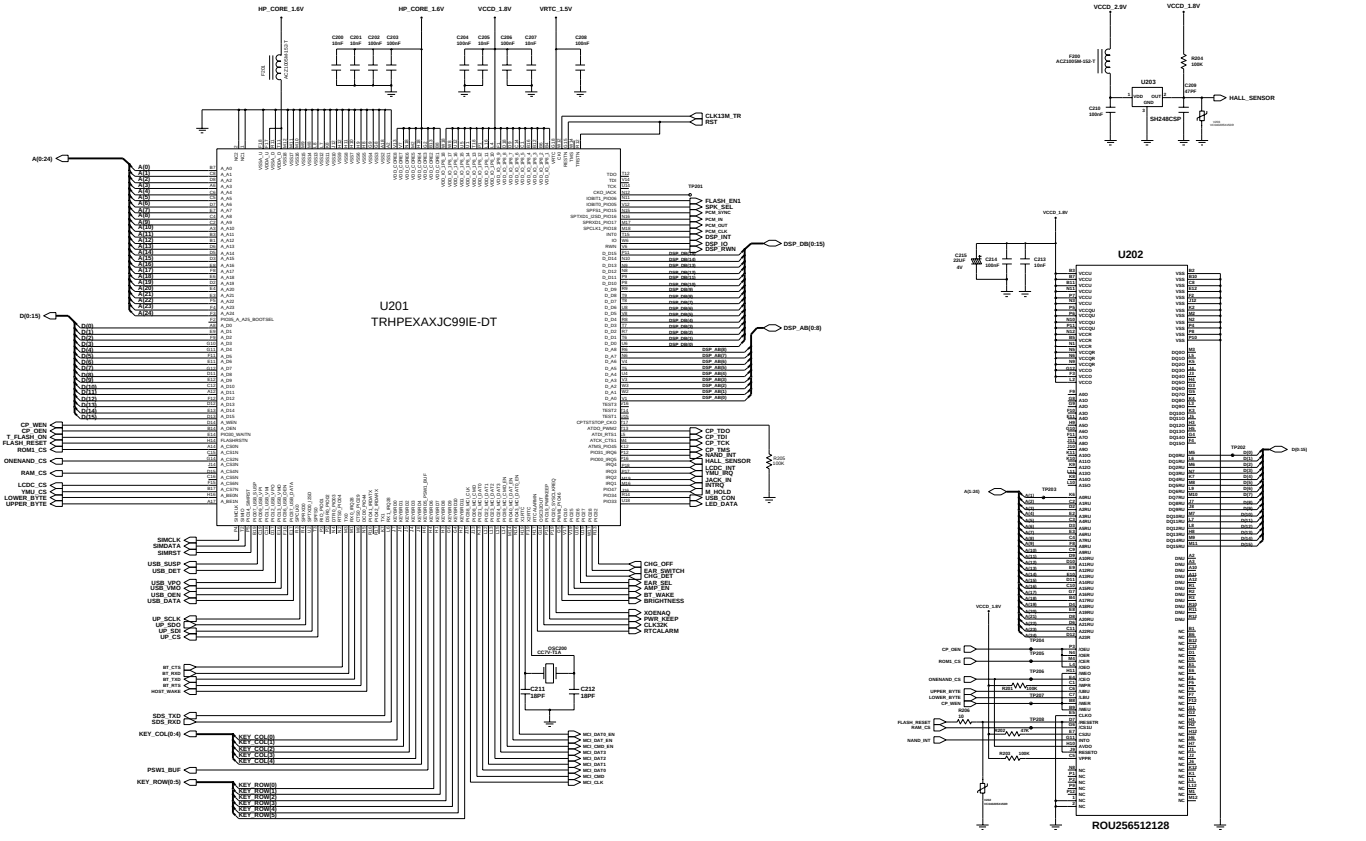


| | | | |
|---|---|---|---|
| Engineer: user23 | COMPANY NAME<br>Address<br>City | | |
| Drawn by: user23 | | | |
| R&D CHK | TITLE | | Size A3 |
| DOC CTRL CHK | SGH-X800 REV 1.0 | | |
| SPG ANGR CHK | | | |
| QA CHK | Rev 1.0 | Drawing Number | Sheet 2 of 5 |

Changed by: user23 | Date Changed: 2005.08.24 | Time Changed

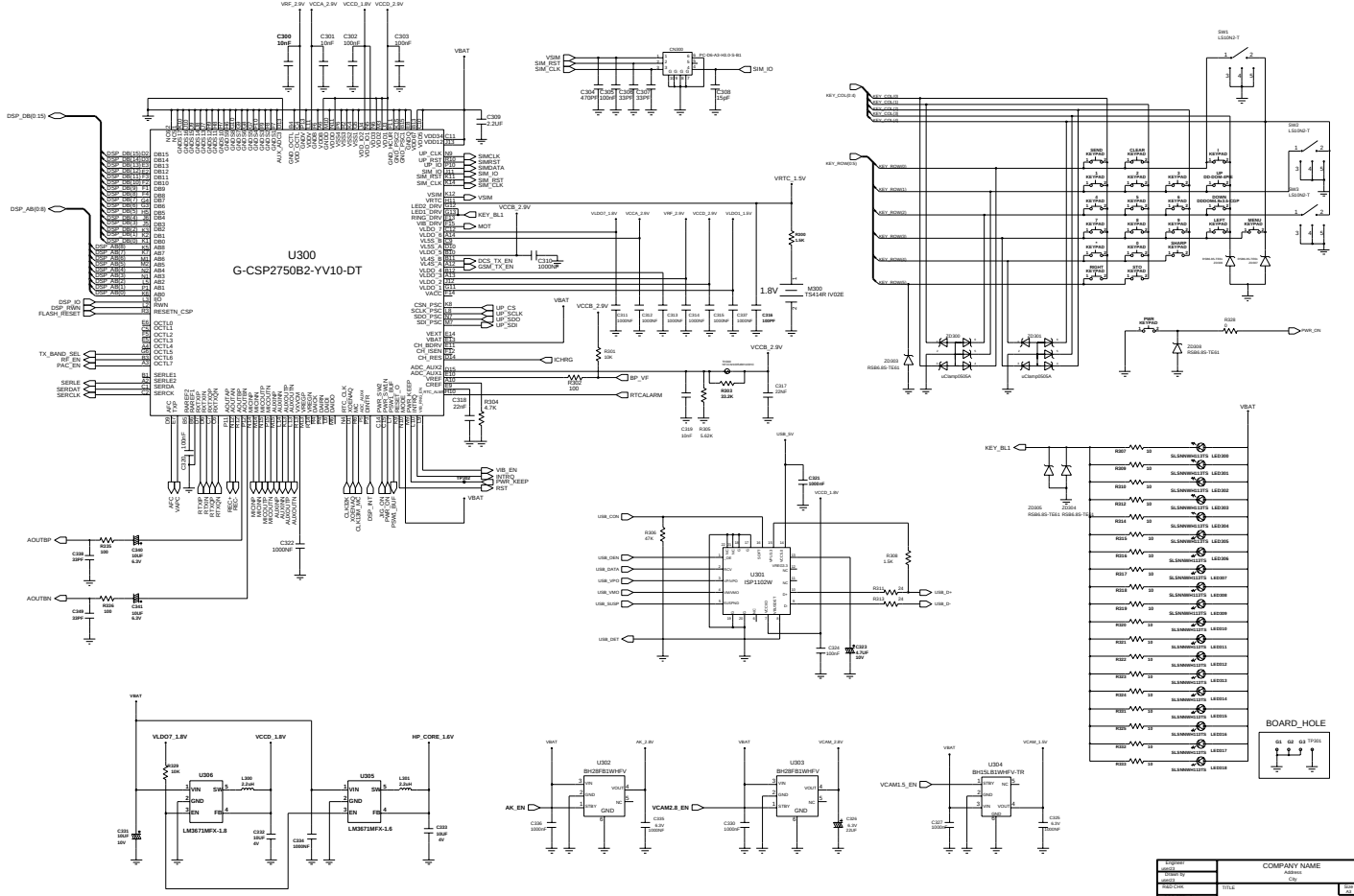
U300
G-CSP2750B2-YV10-DT
U301
ISP1102W
U302
BH28FB1WHFV
U303
BH28FB1WHFV
U304
BH15L81WHFV-TR
U305
LM3671MFX-1.6
U306
LM3671MFX-1.8
BOARD_HOLE
COMPANY NAME
SGH-X800 REV 1.0
2005.08.24

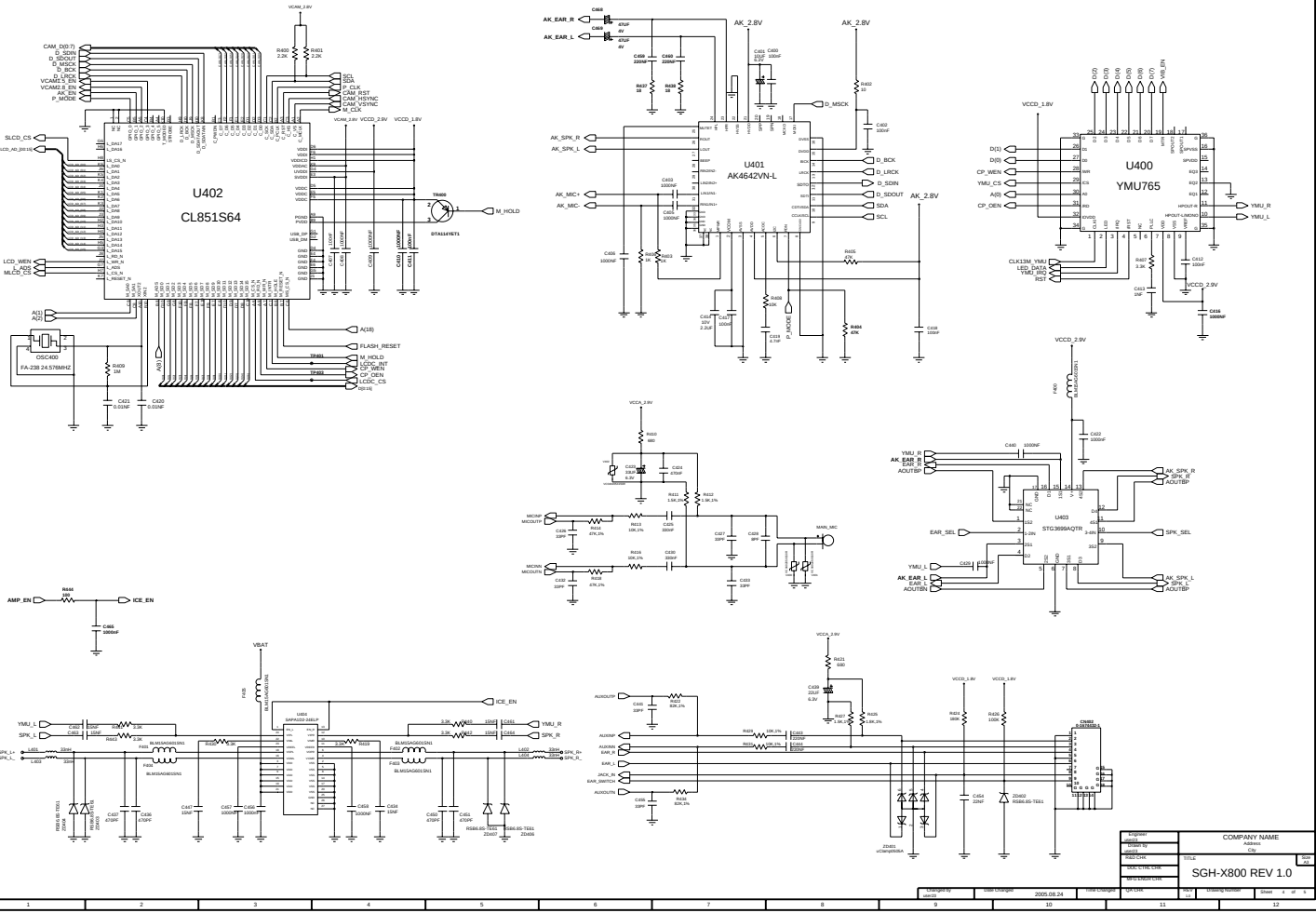


| | | | | | |
|---|---|---|---|---|---|
| Engineer: Author by: | COMPANY NAME<br>Address<br>City | | | | |
| Drawn by: 2007 | | | | | |
| Read CHK | TITLE | | | | SGH-X800 REV 1.0 |
| DOC.CTRL CHK | | | | | |
| BPLA ENGR CHK | | | | | |
| QA CHK | REV 1.0 | Drawing Number | Sheet 4 of 5 | | |
| Initial Signoff by: 2005 | Date Changed | 2005.08.24 | Time Changed | | |

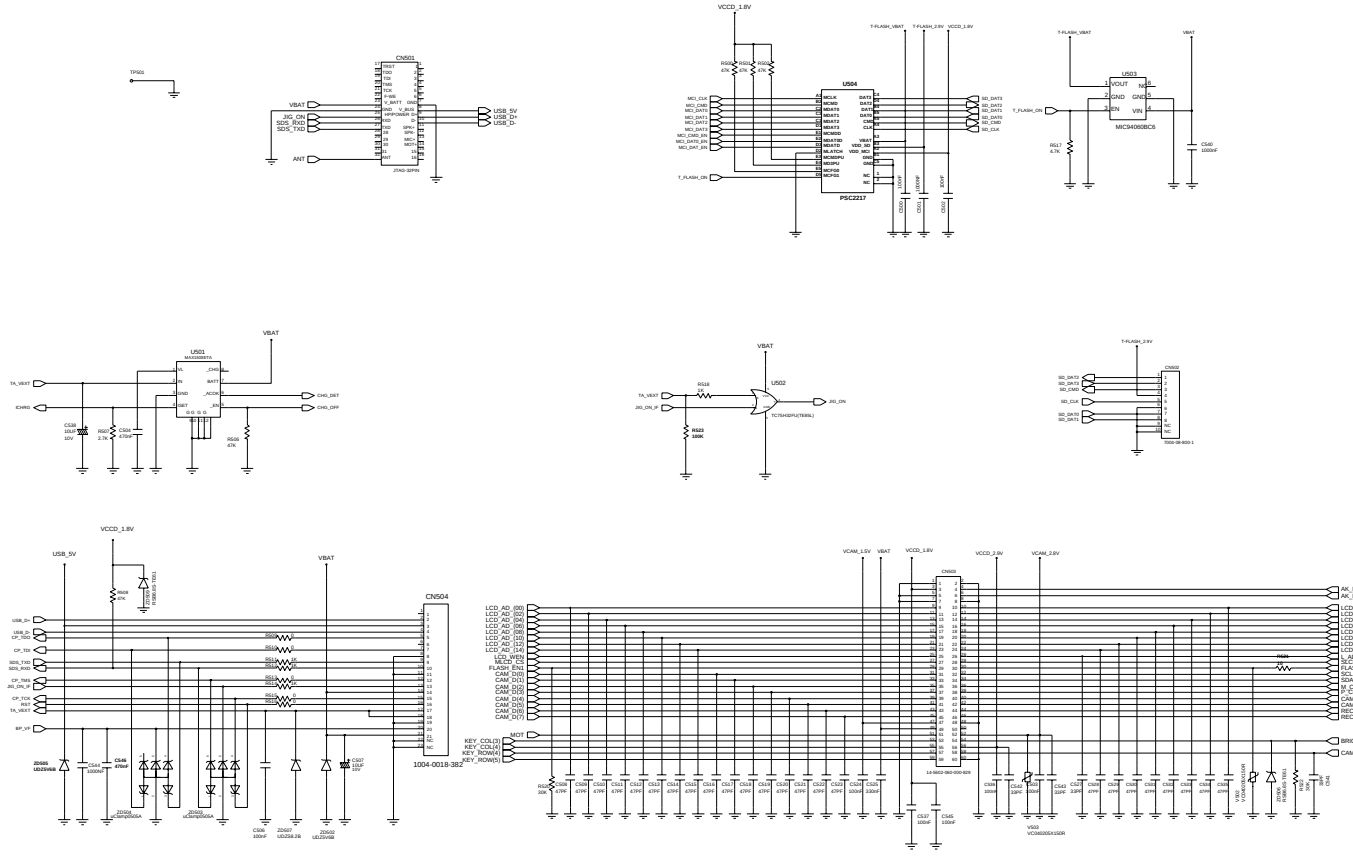
TP501
CN501
JTAG-32PIN
VBAT
JIG_ON
SDS_RXD
SDS_TXD
ANT
USB_5V
USB_D+
USB_D-
VCCD_1.8V
U504
PSC2217
T-FLASH_VBAT
T-FLASH_2.8V
T-FLASH_ON
MC1_CLK
MC1_CMD
MC1_DAT0
MC1_DAT1
MC1_DAT2
MC1_DAT3
MC1_CMD_EN
MC1_DATA_EN
MC1_DAT_EN
SD_DAT3
SD_DAT2
SD_DAT1
SD_DAT0
SD_CMD
SD_CLK
U503
MIC94060BC6
VIN
VOUT
GND
EN
NC
R517
4.7K
C540
1000nF
U501
MAX8888EFA
TA_VBAT
ICHRG
CHG_DET
CHG_OFF
C539
10uF/6.3V
R502
2.7K
C534
470nF
R506
47K
R518
1K
U502
SC70-HZIP1(TS5SL)
JIG_ON_IF
R523
100K
CN502
SDS-SB-B20-1
USB_5V
VCCD_1.8V
VBAT
R508
47K
CN504
1004-0018-382
LCD_AD_(00)
LCD_AD_(01)
LCD_AD_(02)
LCD_AD_(03)
LCD_AD_(04)
LCD_AD_(05)
LCD_AD_(06)
LCD_AD_(07)
LCD_AD_(08)
LCD_AD_(09)
LCD_AD_(10)
LCD_AD_(11)
LCD_AD_(12)
LCD_AD_(13)
LCD_AD_(14)
LCD_WR
MLCD_CS
FLASH_EN1
CAM_D(0)
CAM_D(1)
CAM_D(2)
CAM_D(3)
CAM_D(4)
CAM_D(5)
CAM_D(6)
CAM_D(7)
MOT
KEY_COL(3)
KEY_COL(4)
KEY_ROW(4)
KEY_ROW(5)
VCAM_1.5V
VCAM_2.8V
CN503
14-5602-060-000-829
AK_MIC-
AK_MIC+
LCD_AD_(01)
LCD_AD_(02)
LCD_AD_(03)
LCD_AD_(04)
LCD_AD_(05)
LCD_AD_(06)
LCD_AD_(07)
LCD_AD_(08)
LCD_AD_(09)
LCD_AD_(10)
LCD_AD_(11)
LCD_AD_(12)
LCD_AD_(13)
LCD_AD_(14)
LCD_AD_(15)
MDS
SUB_LCD_CS
FLASH_RESET
SCL
SDA
M_CLK
CAM_CLK
CAM_VSYNC
CAM_HSYNC
REC-
REC+
BRIGHTNESS
CAM_RST
R520
10K
C537
100nF
C545
100nF
C543
10pF/C
C542
10pF/C
C547
10pF/C
C548
10pF/C
C549
10pF/C
C550
10pF/C
C551
10pF/C
C552
10pF/C
C553
10pF/C
C554
10pF/C
C555
10pF/C
C556
10pF/C
C557
10pF/C
C558
10pF/C
C559
10pF/C
C560
10pF/C
C561
10pF/C
C562
10pF/C
C563
10pF/C
C564
10pF/C
C565
10pF/C
C566
10pF/C

G2
G1
G3
TP101
CN100
SW1
F100
U101
U403
CN503
CN402
C113
U401
U103
U400
U402
SW2
U300
U201
U202
SW3
CN502
CN300
U102
AN101
U301
U504
M300
CN504
MAIN_MIC
U501
U502
U305
U306
OSC200
OSC400
OSC100
OSC101
U302
U503
ZD506
ZD407
ZD402
ZD401
C326
C325
C304
U303
C424
C327
C330
C340
C341
C414
C406
C401
C468
C469
C439
C440
C429
C422
C429
C431
C414
C322
C434
C459
C201
C215
C141
C104
C143
C312
C314
C313
C310
C309
C332
C331
C333
L300
L301
C127
C334
C540
C538
C507
C125
C546
C317
C423
C424
C402
C323
C410
C501
C502
C504
C507
C538
C546
C300
C301
C302
C303
C304
C305
C306
C307
C308
C309
C310
C311
C312
C313
C314
C315
C316
C317
C318
C319
C320
C321
C322
C323
C324
C325
C326
C327
C328
C329
C330
C331
C332
C333
C334
C335
C336
C337
C338
C339

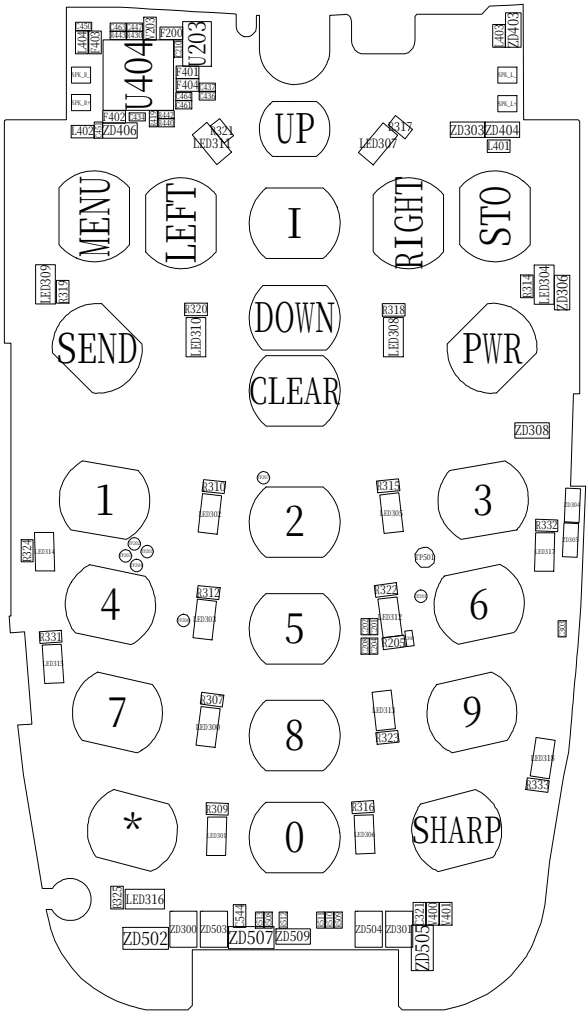
U404
U203
F203
F200
F401
F405
F402
F406
L402
ZD406
R403
ZD403
R402
ZD402
R401
ZD401
L401
ZD303
ZD404
UP
R321
LED311
R315
LED307
MENU
LEFT
I
RIGHT
STO
LED309
R319
R314
LED304
ZD304
SEND
R320
LED310
DOWN
R318
LED308
PWR
CLEAR
ZD308
1
R310
2
R313
3
R324
LED314
R332
LED312
4
R312
5
R322
6
R331
LED313
F203
7
R307
8
R323
9
R333
*
R309
0
R316
SHARP
R328
LED316
ZD502
ZD500
ZD503
R344
ZD507
ZD509
ZD504
ZD301
ZD505
R401