10. Flow Chart of Troubleshooting

10-1-1. Power ON

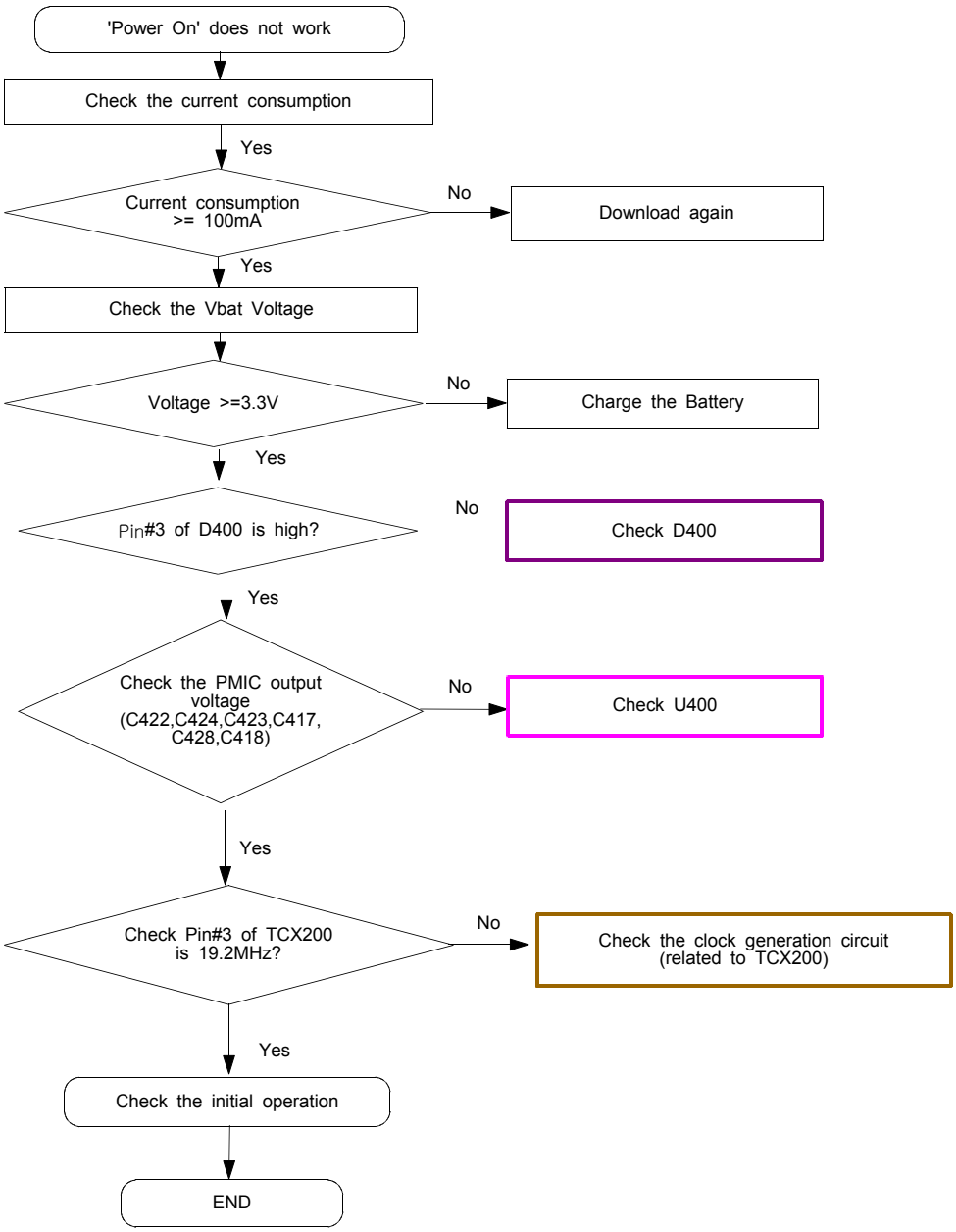

SAMSUNG Proprietary-Contents may change without notice
This Document can not be used without Samsung's authorization

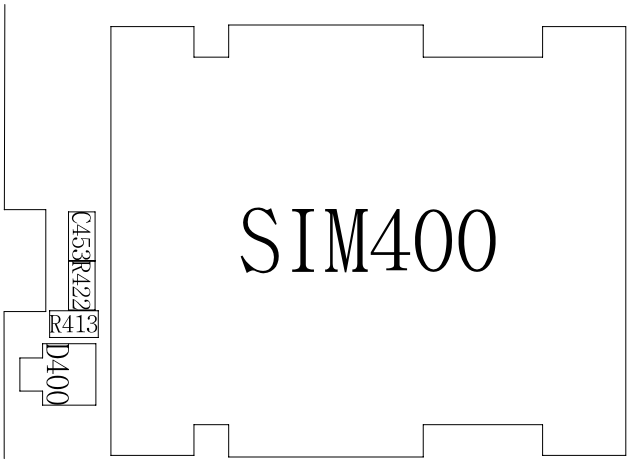

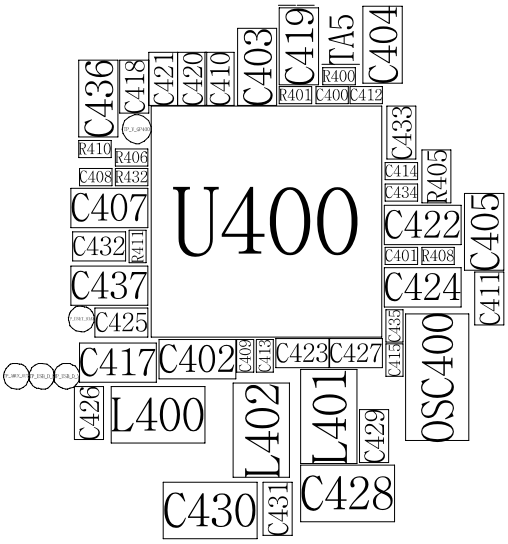

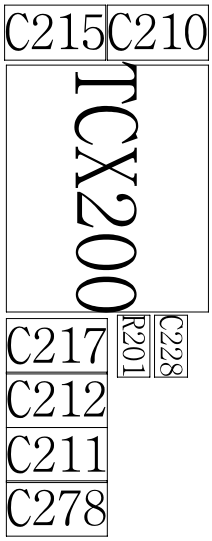

SAMSUNG Proprietary-Contents may change without notice
This Document can not be used without Samsung's authorization

< Power Management IC >

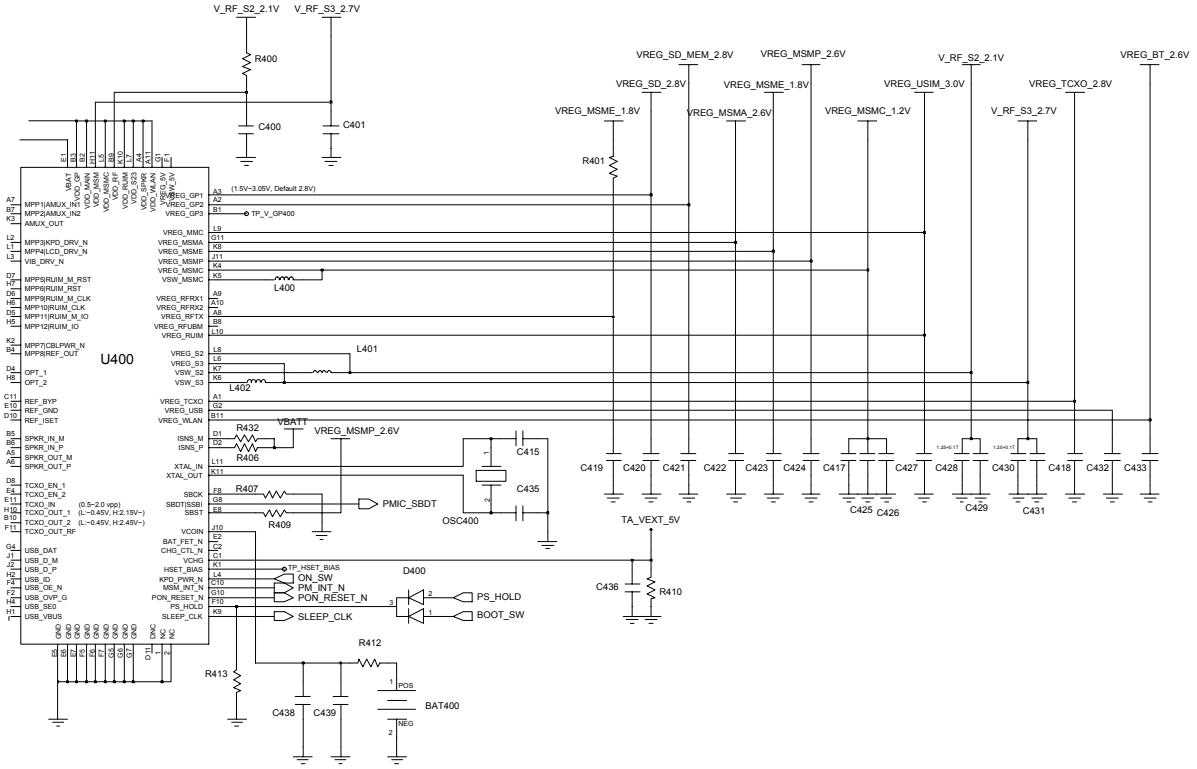

SAMSUNG Proprietary-Contents may change without notice
This Document can not be used without Samsung's authorization

10-1-2. Charging Part

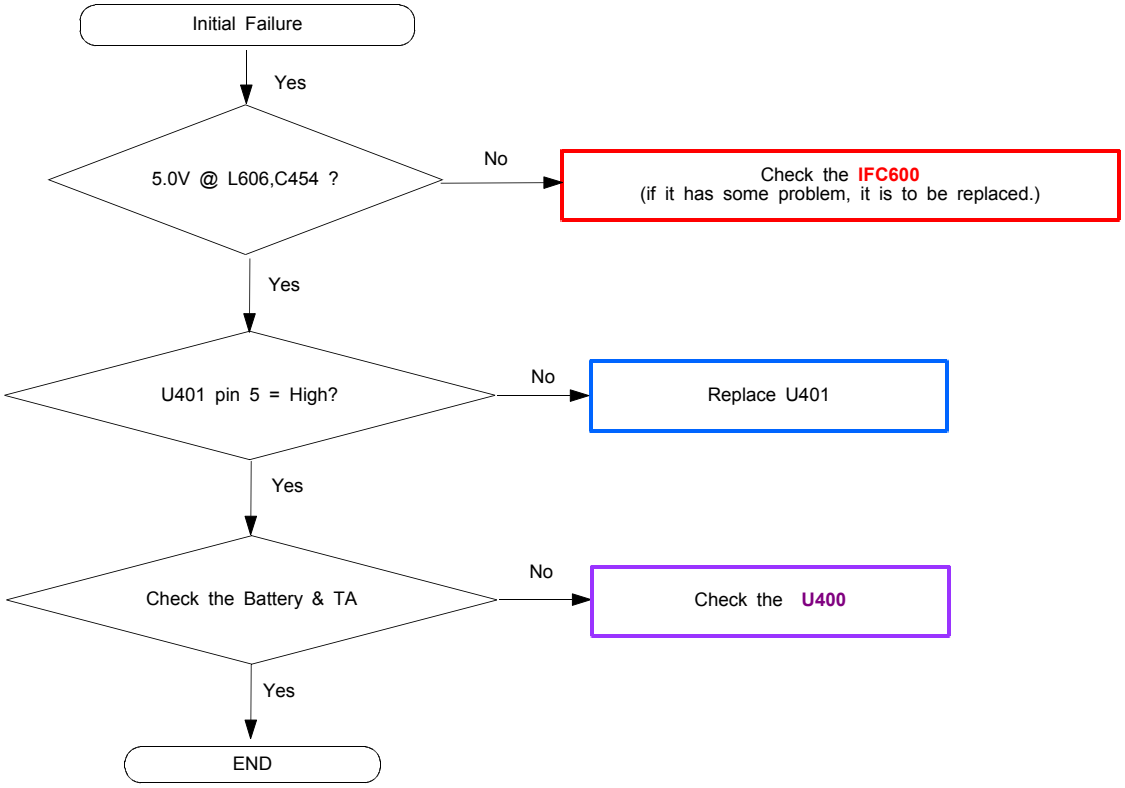

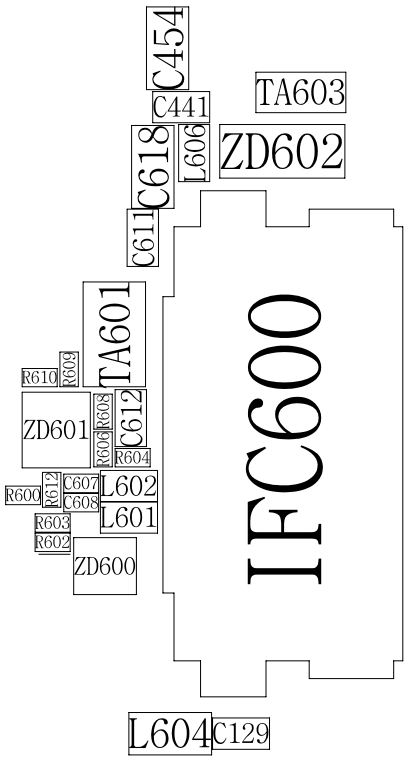

SAMSUNG Proprietary-Contents may change without notice
This Document can not be used without Samsung's authorization

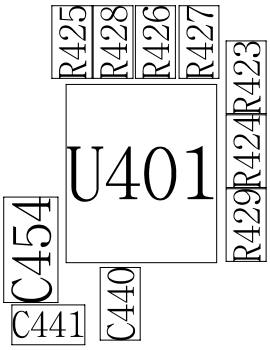

< IF CONNECTOR >

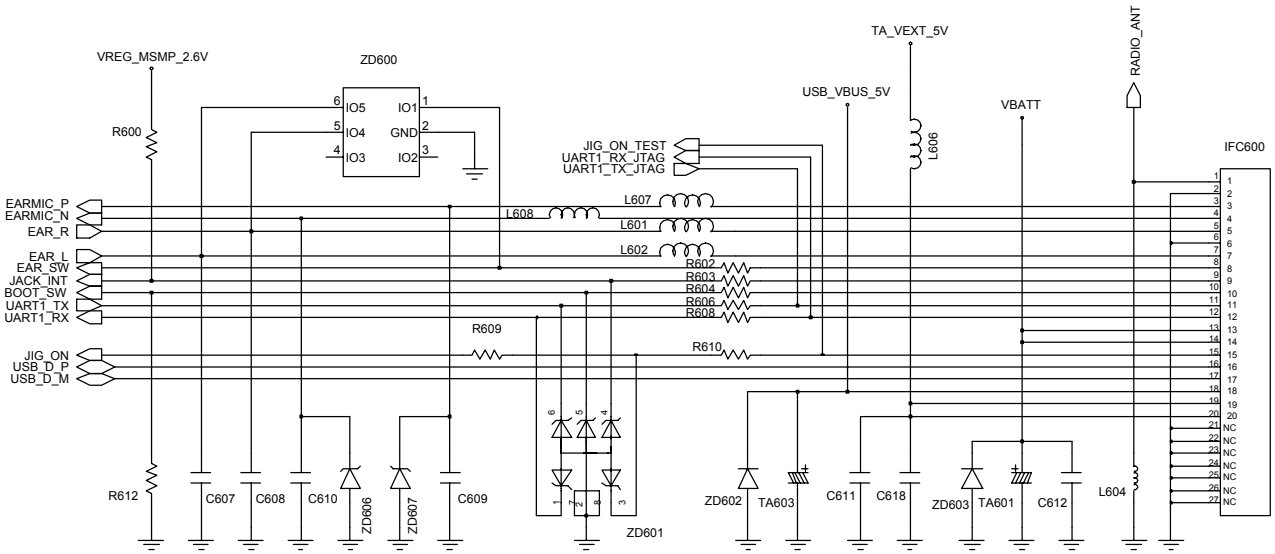

< CHARGER >

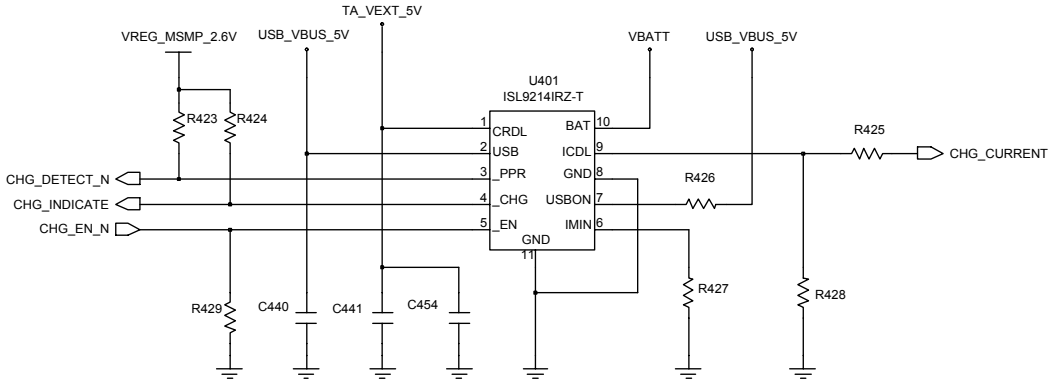

SAMSUNG Proprietary-Contents may change without notice
This Document can not be used without Samsung's authorization

10-1-3. Sim Part

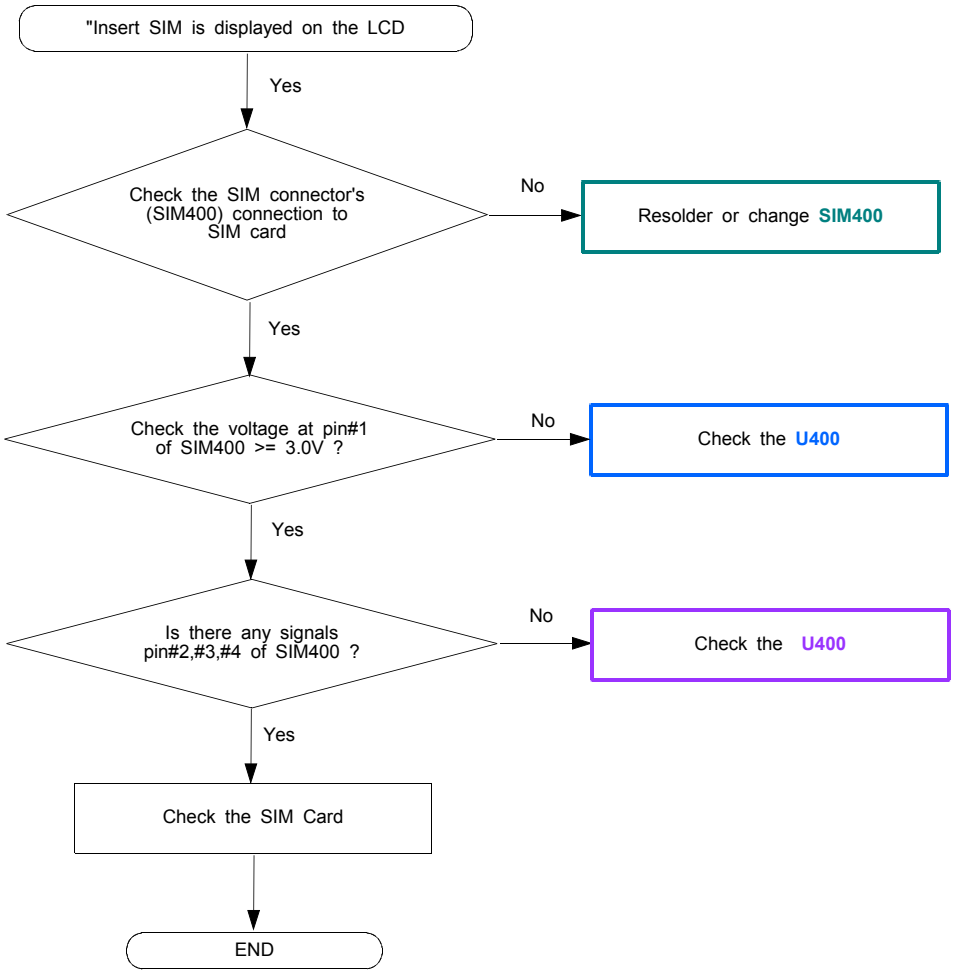

SAMSUNG Proprietary-Contents may change without notice
This Document can not be used without Samsung's authorization

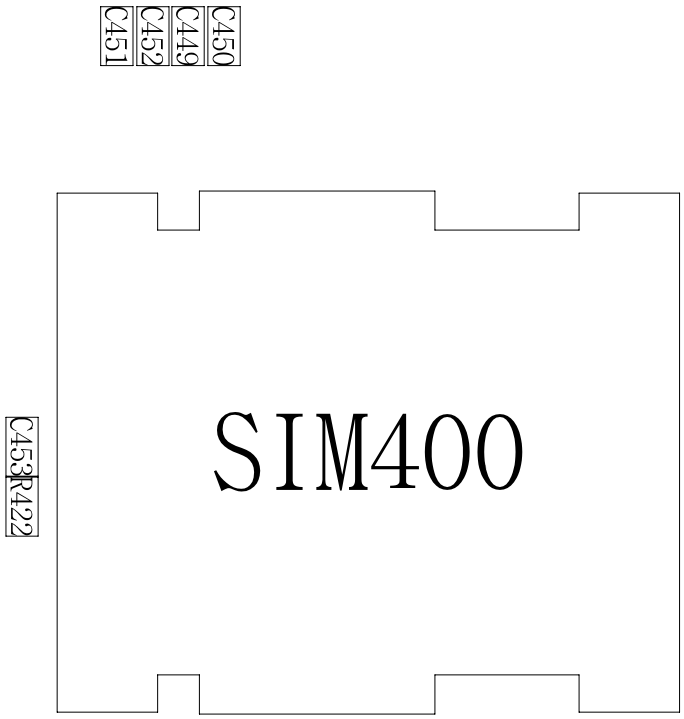

< U-SIM >

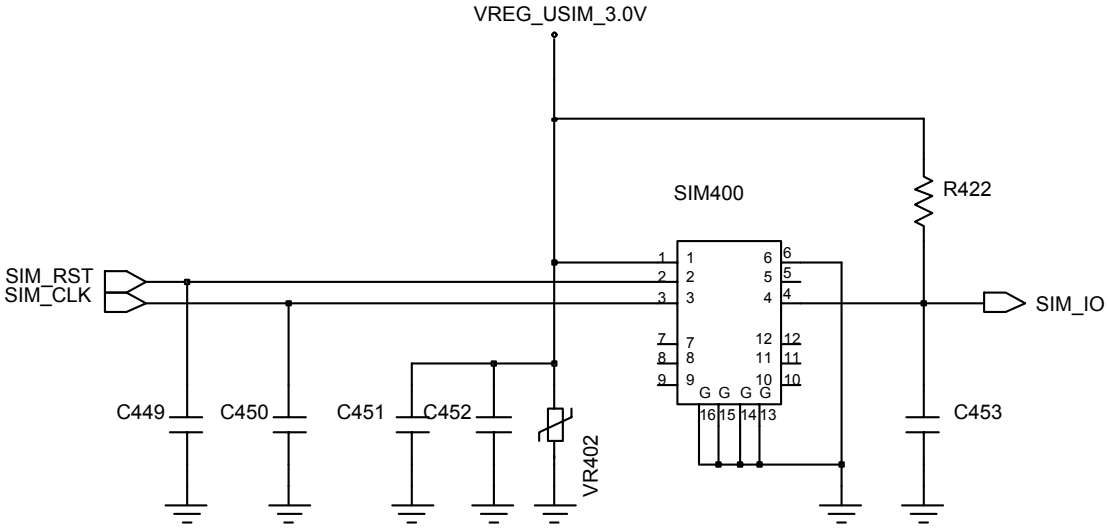

SAMSUNG Proprietary-Contents may change without notice
This Document can not be used without Samsung's authorization

10-1-4. Microphone Part

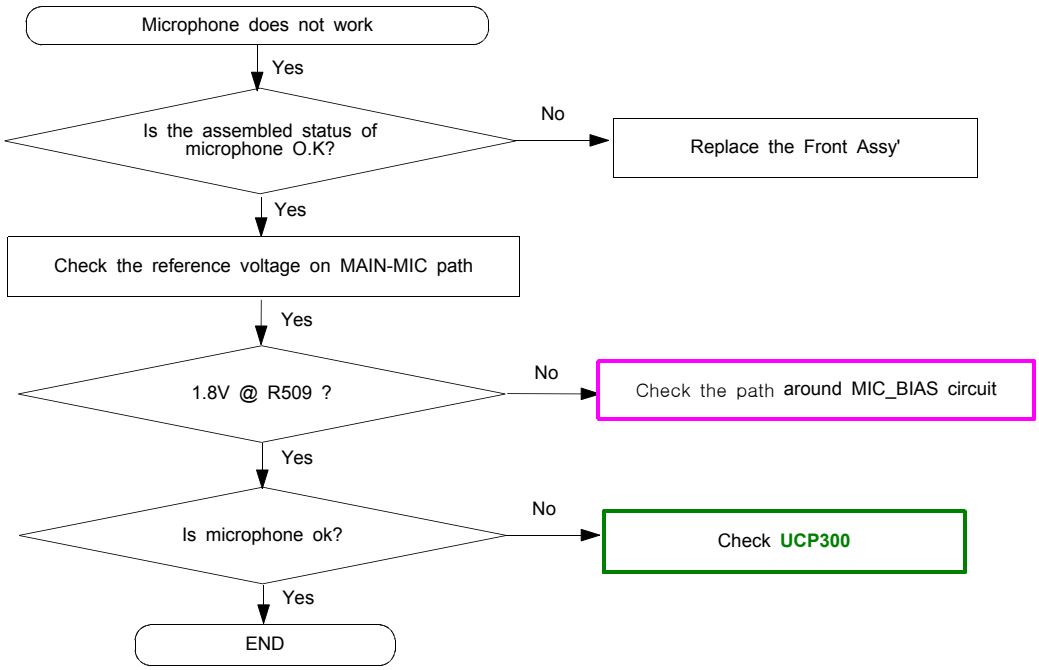

SAMSUNG Proprietary-Contents may change without notice
This Document can not be used without Samsung's authorization

<KEY CONNECTOR>

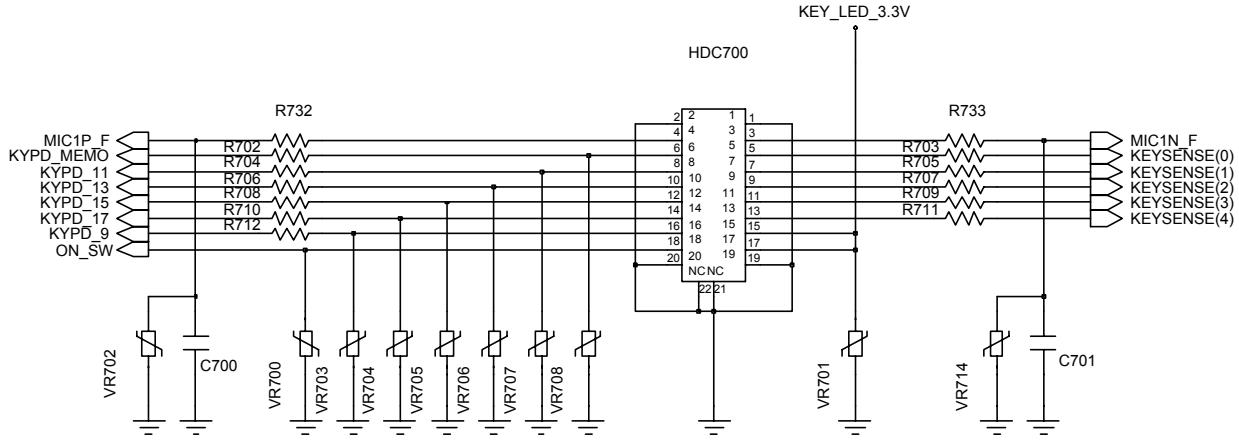

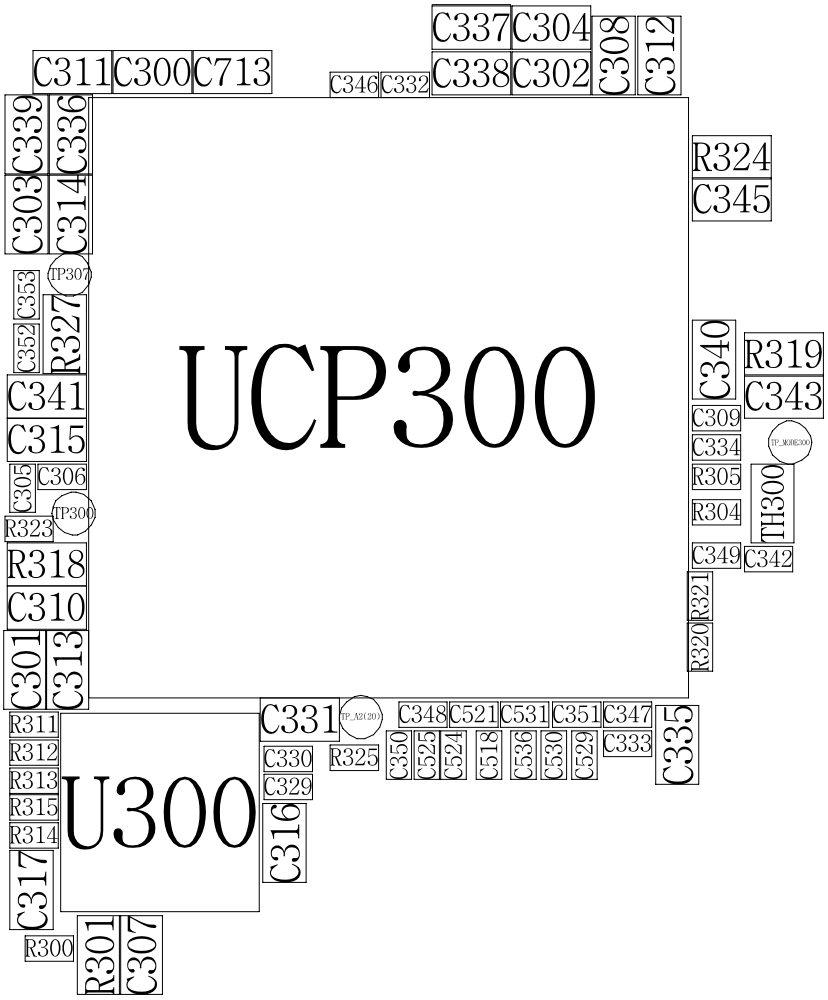

SAMSUNG Proprietary-Contents may change without notice
This Document can not be used without Samsung's authorization

<MAIN-MIC PATH>

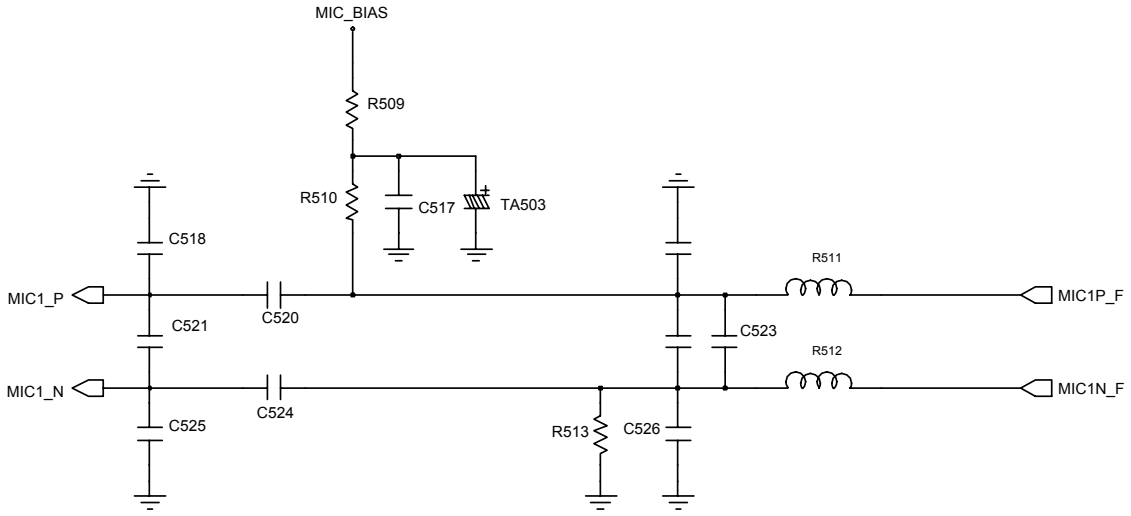

SAMSUNG Proprietary-Contents may change without notice
This Document can not be used without Samsung's authorization

10-1-5. Receiver Part

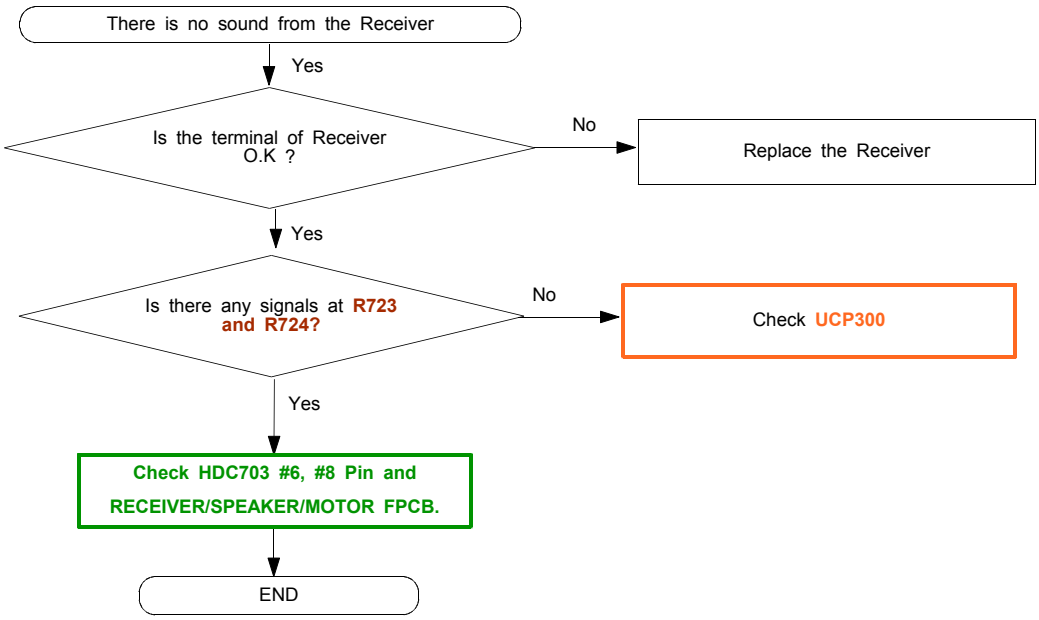

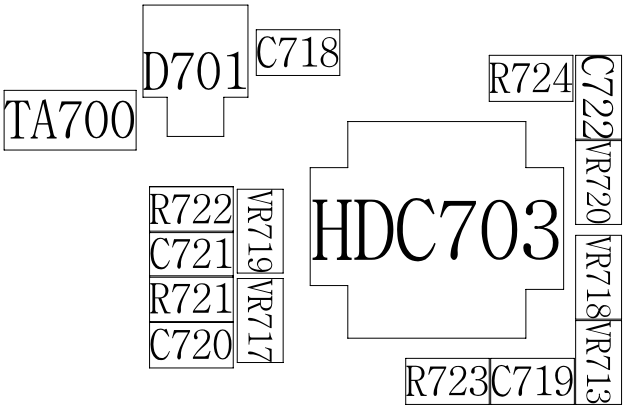

<SPK/RCV/MTR CONNECTOR>

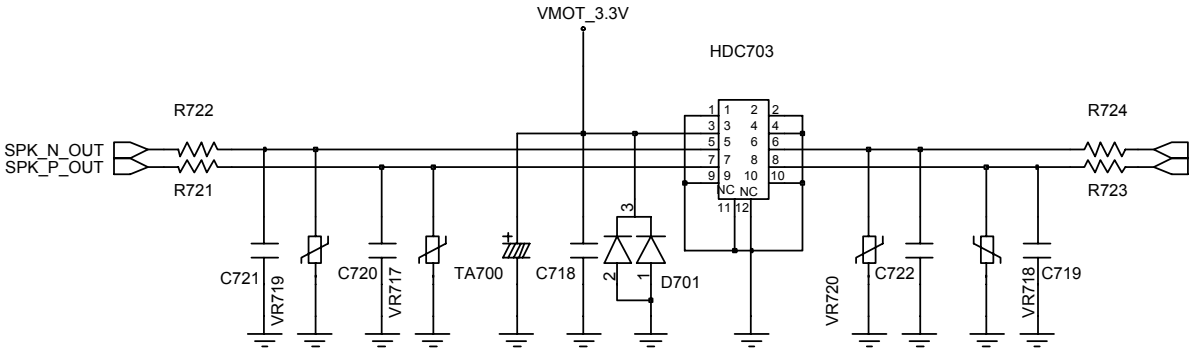

SAMSUNG Proprietary-Contents may change without notice
This Document can not be used without Samsung's authorization

10-1-6. Speaker Part

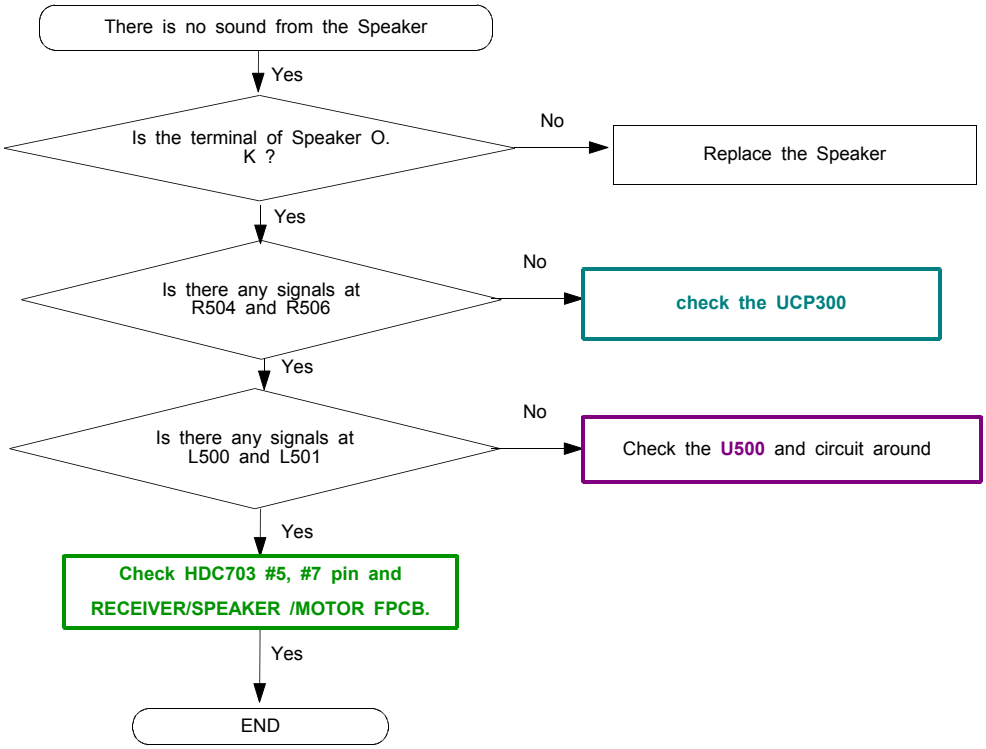

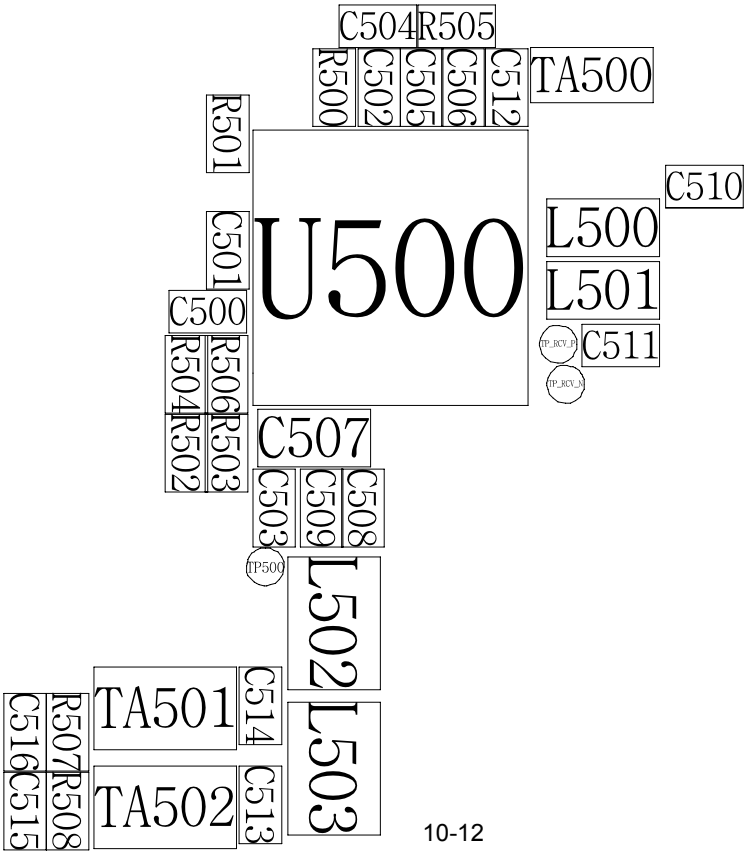

SAMSUNG Proprietary-Contents may change without notice
This Document can not be used without Samsung's authorization

<AUDIO AMP (SAPA2)>

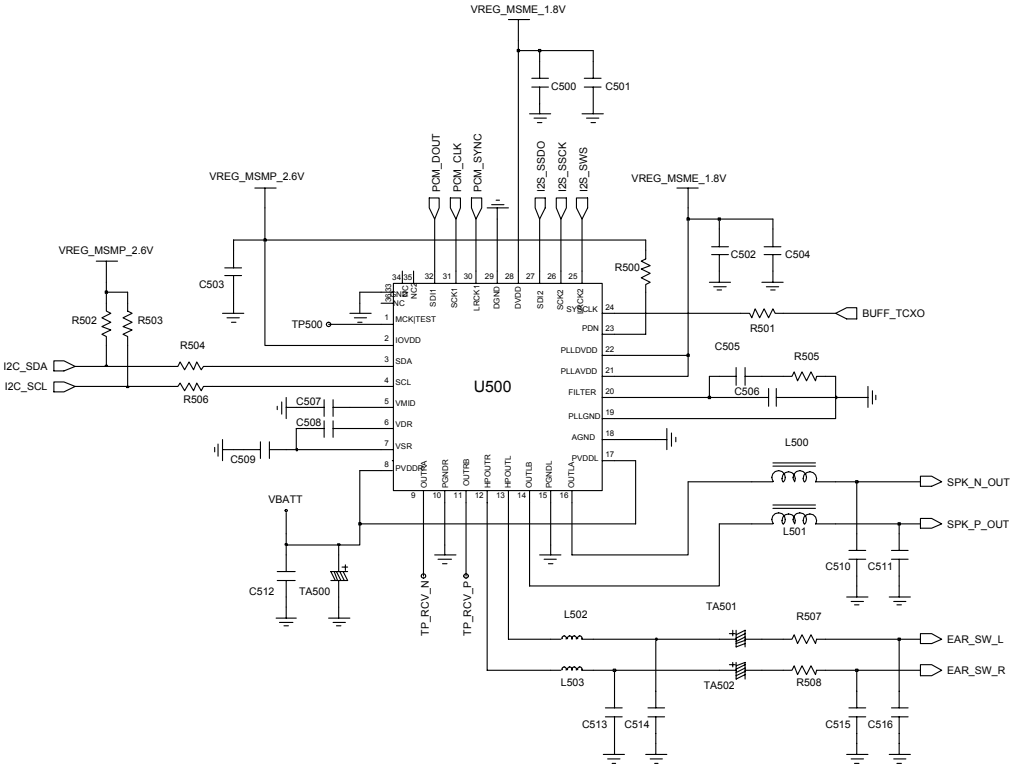

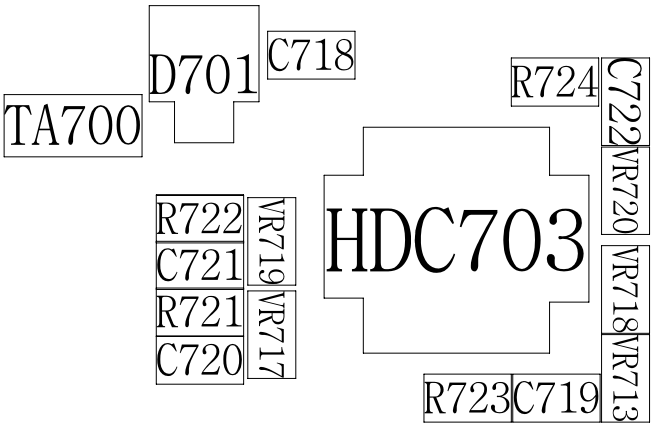

<SPK/RCV/MTR CONNECTOR>

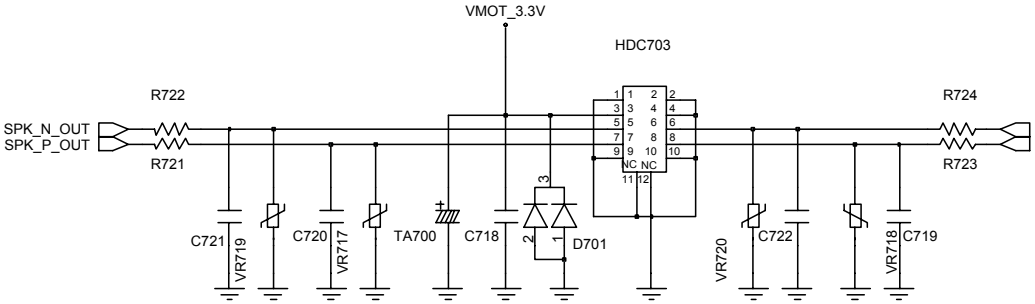

SAMSUNG Proprietary-Contents may change without notice
This Document can not be used without Samsung's authorization

10-1-7. EARPHONE Part

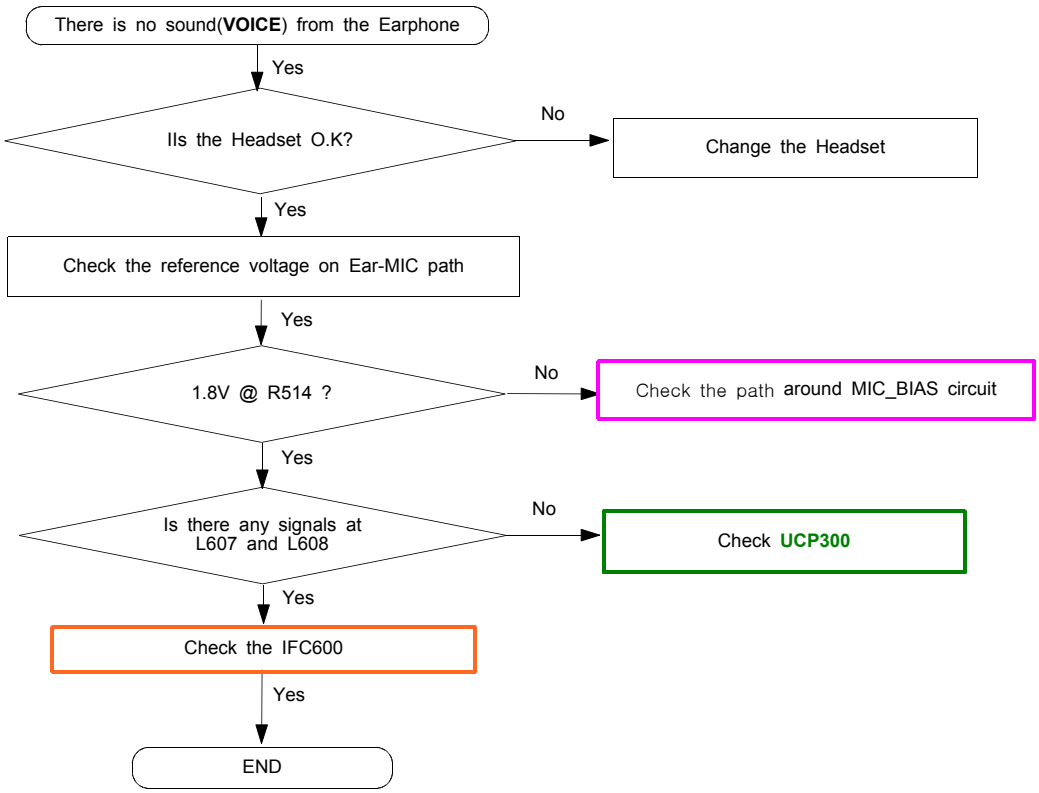

<EAR-MIC PATH>

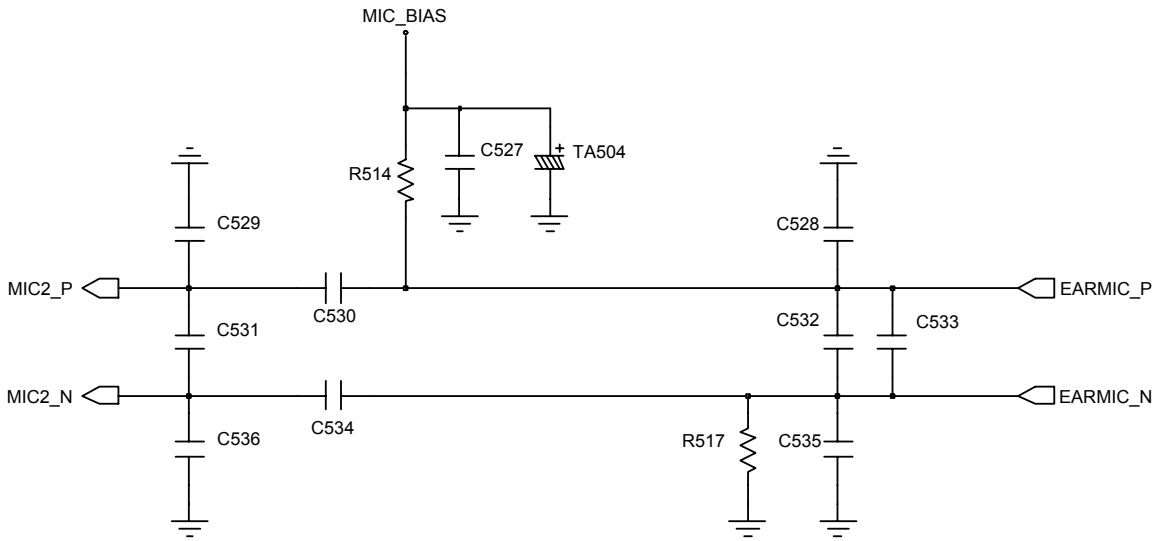

SAMSUNG Proprietary-Contents may change without notice
This Document can not be used without Samsung's authorization

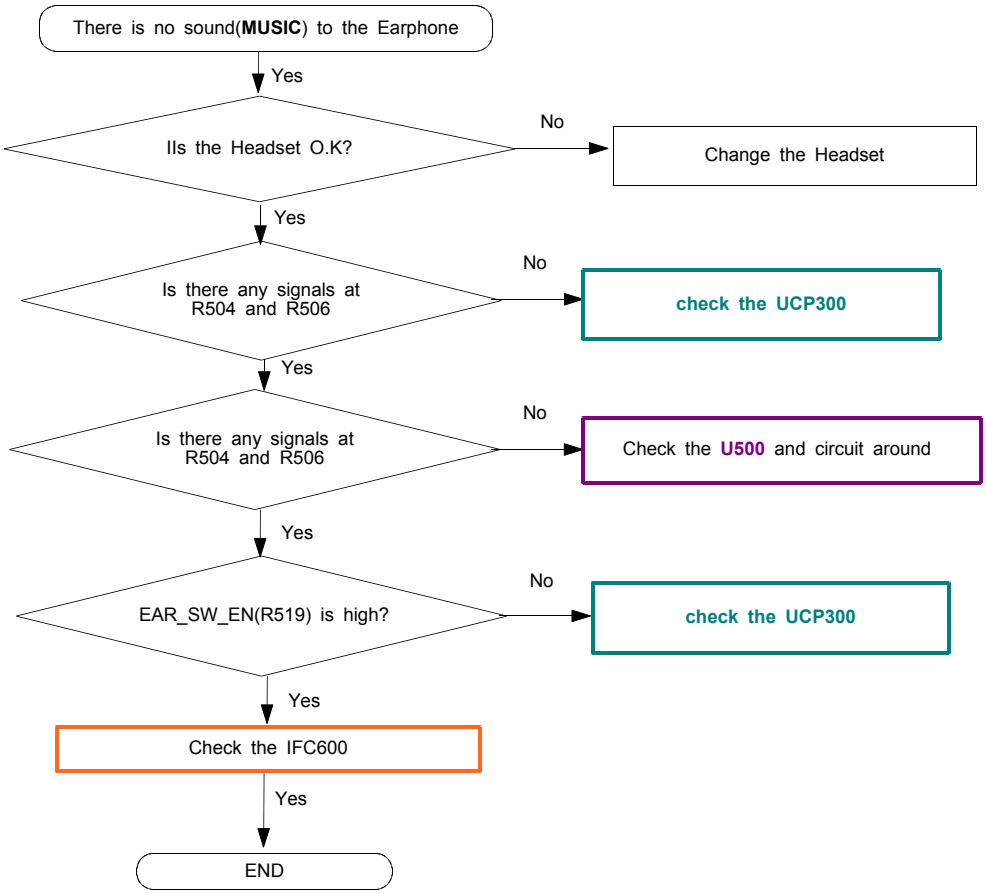

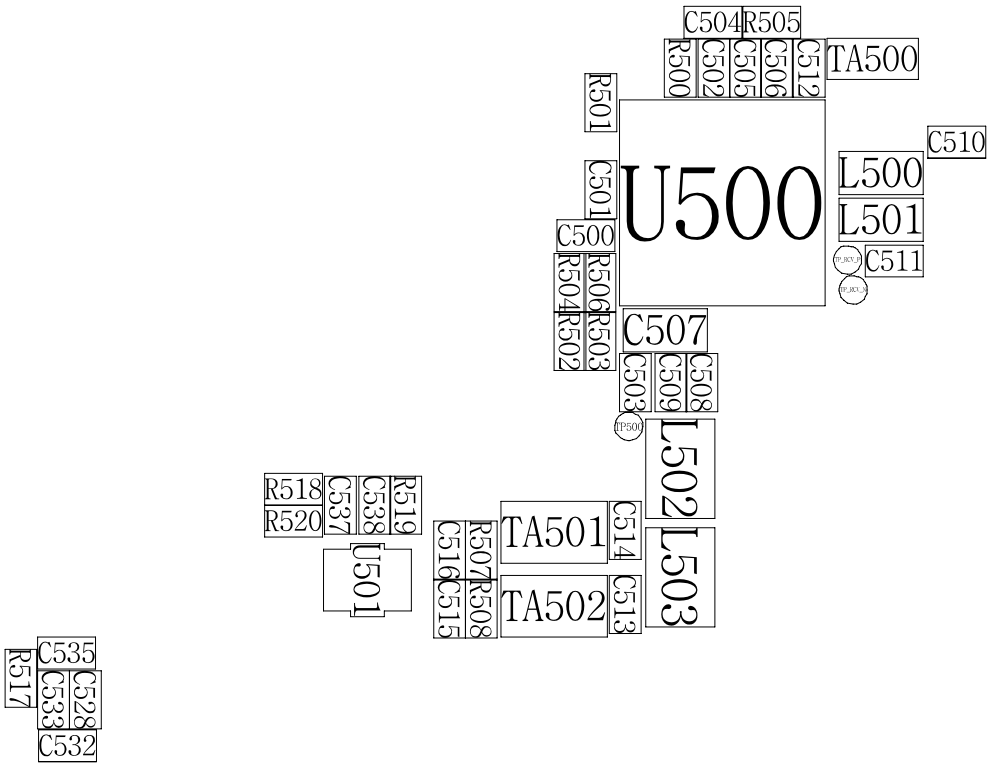

SAMSUNG Proprietary-Contents may change without notice
This Document can not be used without Samsung's authorization

<AUDIO AMP (SAPA2)>

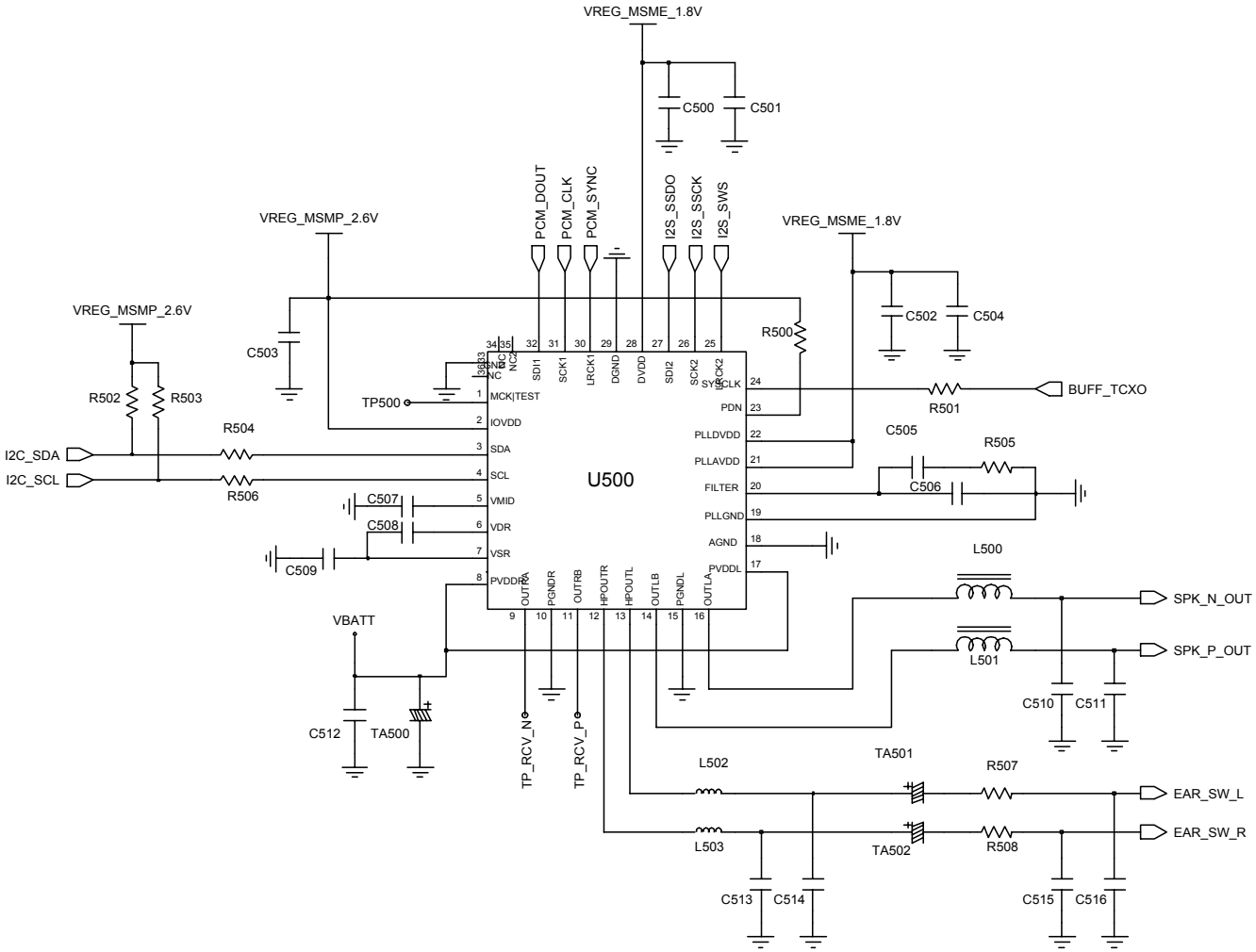

<EAR SWITCH>

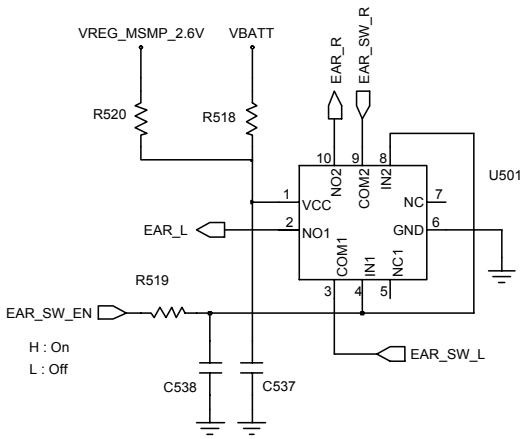

SAMSUNG Proprietary-Contents may change without notice
This Document can not be used without Samsung's authorization

< IF CONNECTOR >

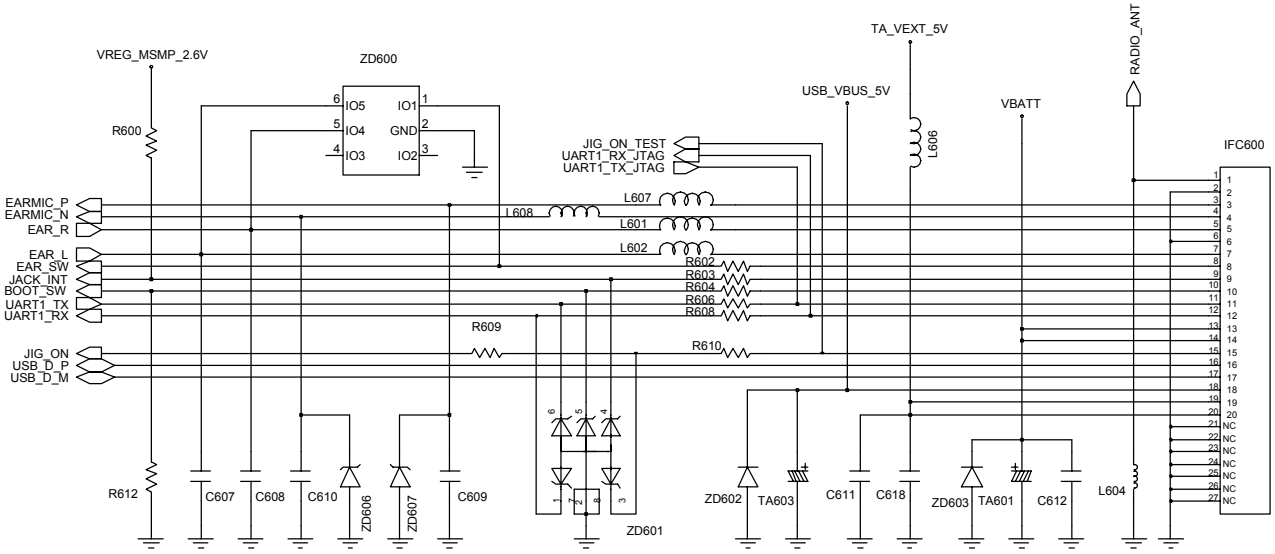

SAMSUNG Proprietary-Contents may change without notice
This Document can not be used without Samsung's authorization

10-1-8. FM RADIO Part

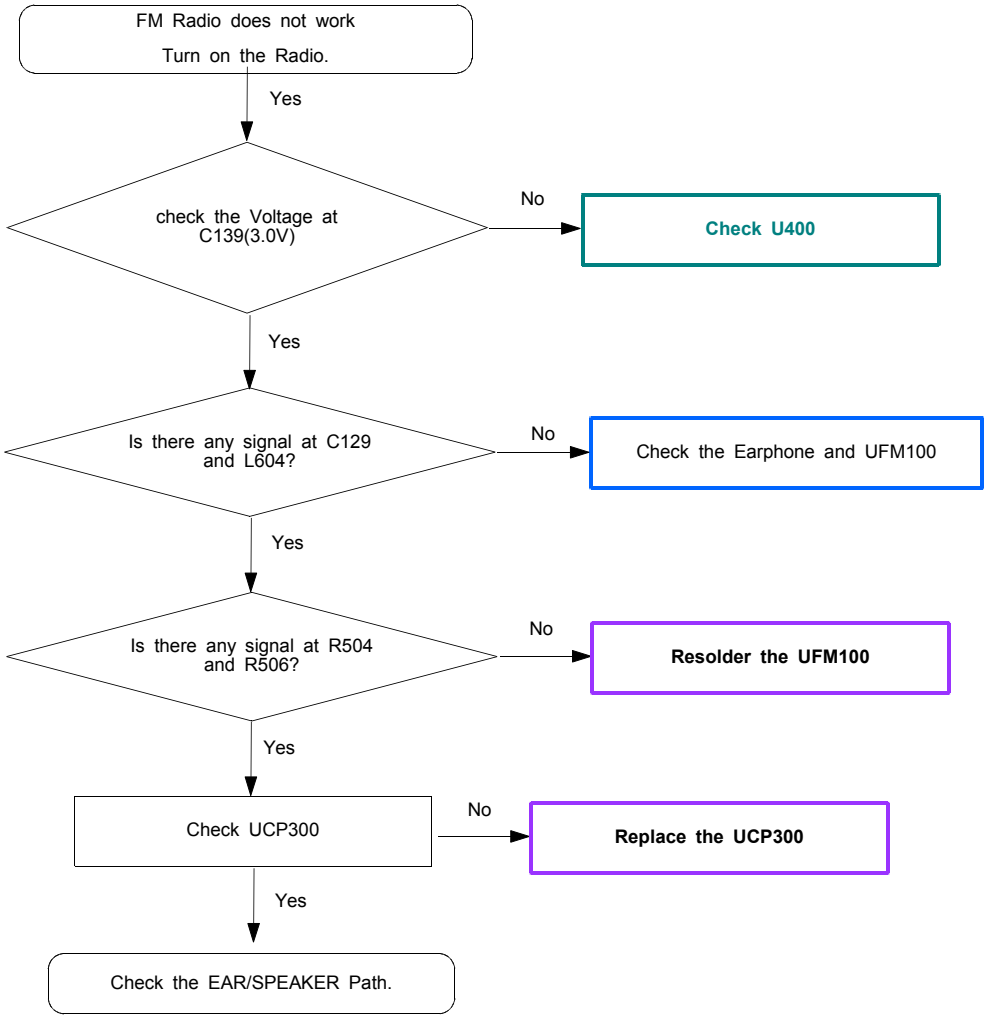

SAMSUNG Proprietary-Contents may change without notice
This Document can not be used without Samsung's authorization

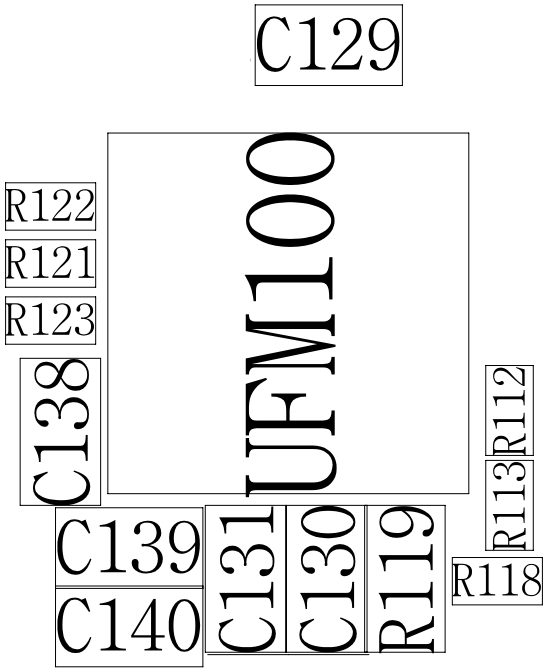

< FM RADIO >

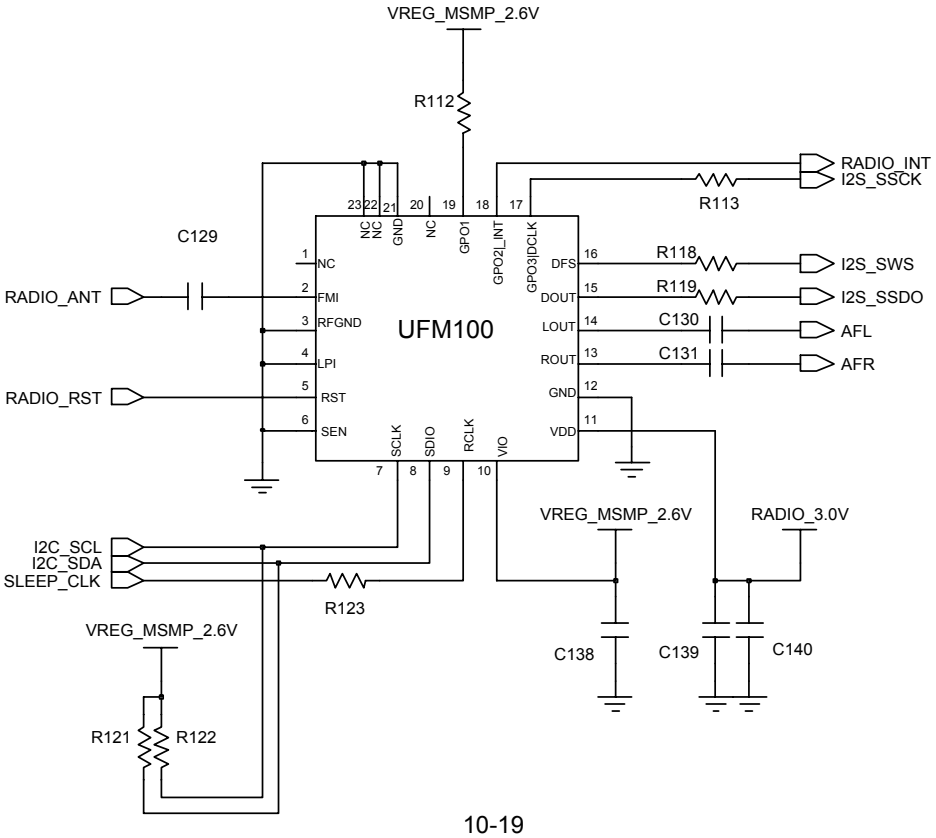

SAMSUNG Proprietary-Contents may change without notice
This Document can not be used without Samsung's authorization

10-2-1. EGSM900 RX

Band : EGSM
CELL POWER : -50dBm
Channel : 62Ch

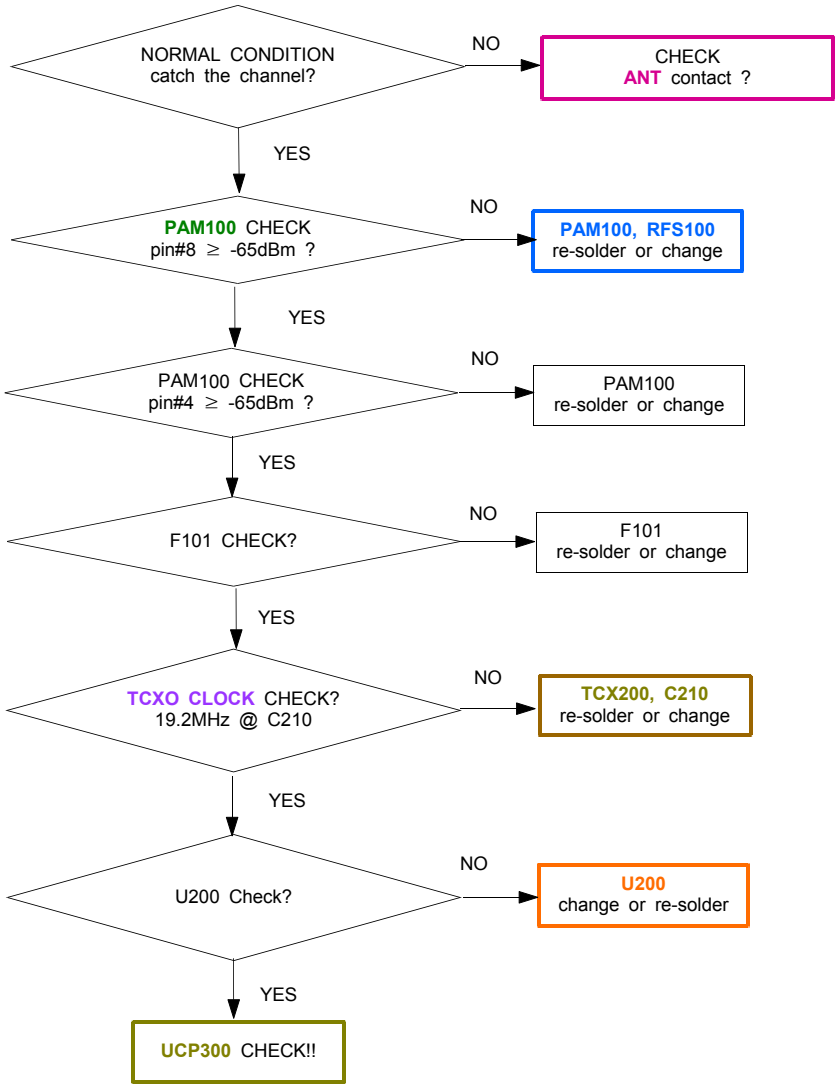

SAMSUNG Proprietary-Contents may change without notice
This Document can not be used without Samsung's authorization

10-2-2. DCS1800 RX

SAMSUNG Proprietary-Contents may change without notice
This Document can not be used without Samsung's authorization

10-2-3. PCS1900 RX

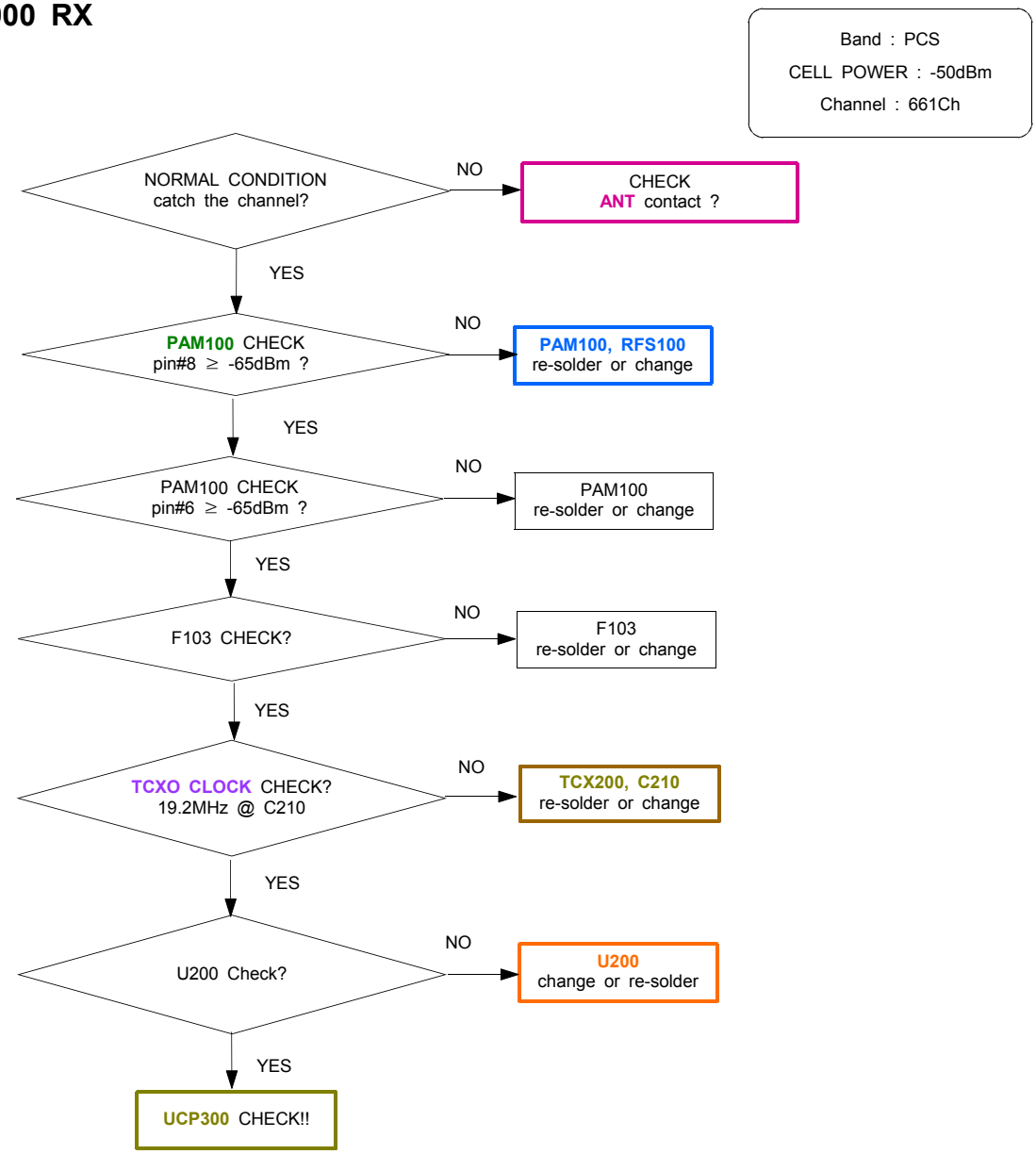

SAMSUNG Proprietary-Contents may change without notice
This Document can not be used without Samsung's authorization

10-2-4. WCDMA2100 RX

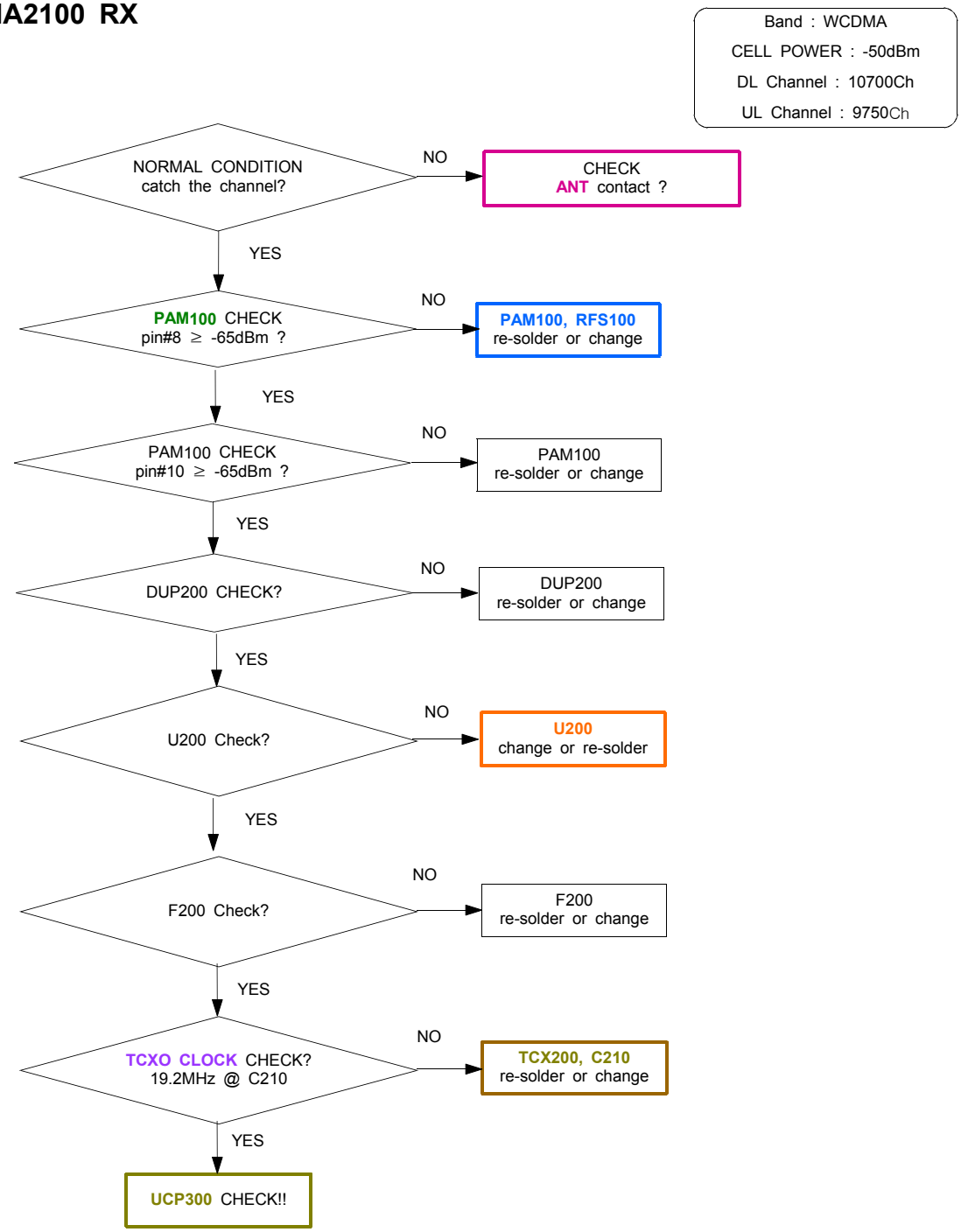

SAMSUNG Proprietary-Contents may change without notice
This Document can not be used without Samsung's authorization

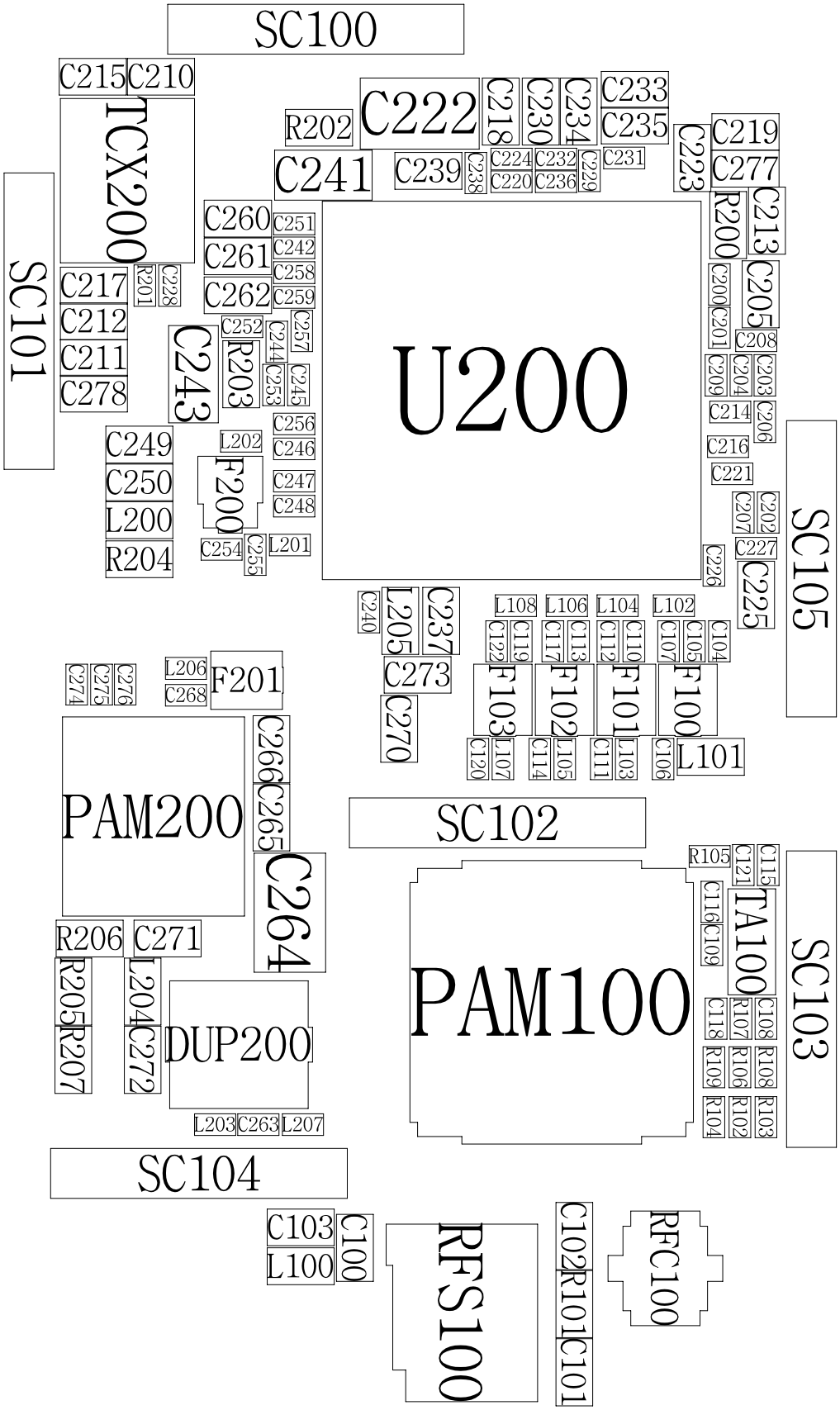

SAMSUNG Proprietary-Contents may change without notice
This Document can not be used without Samsung's authorization

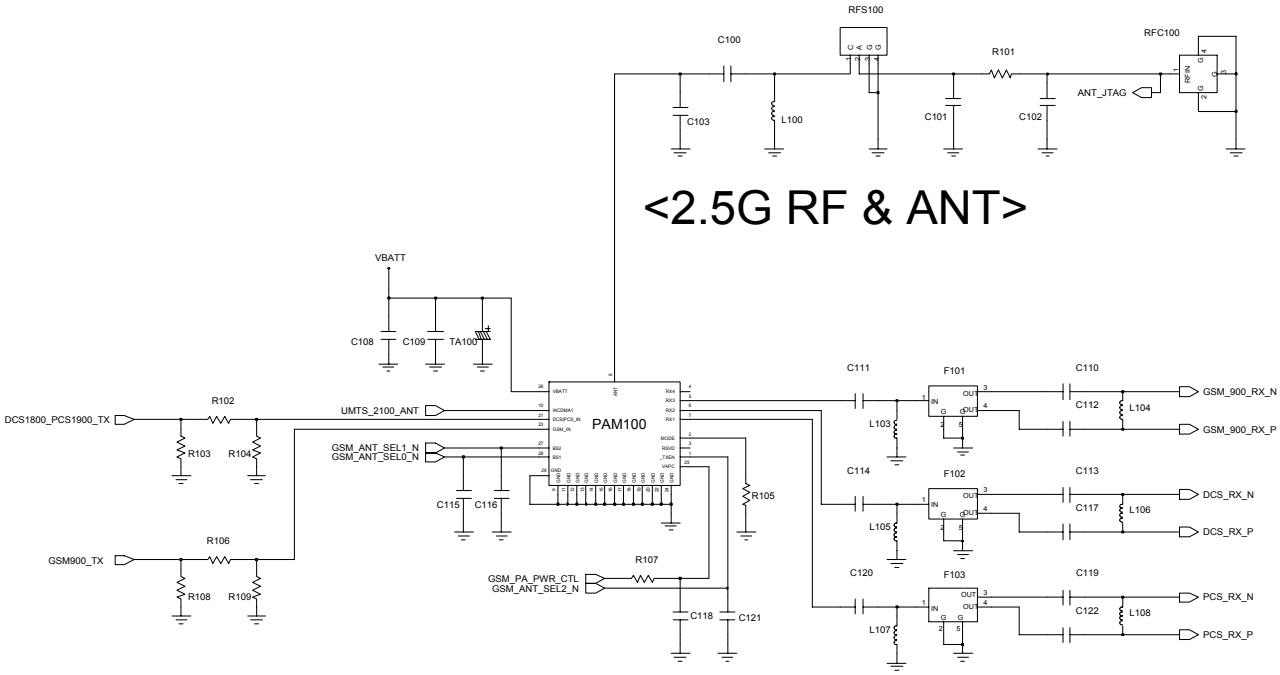

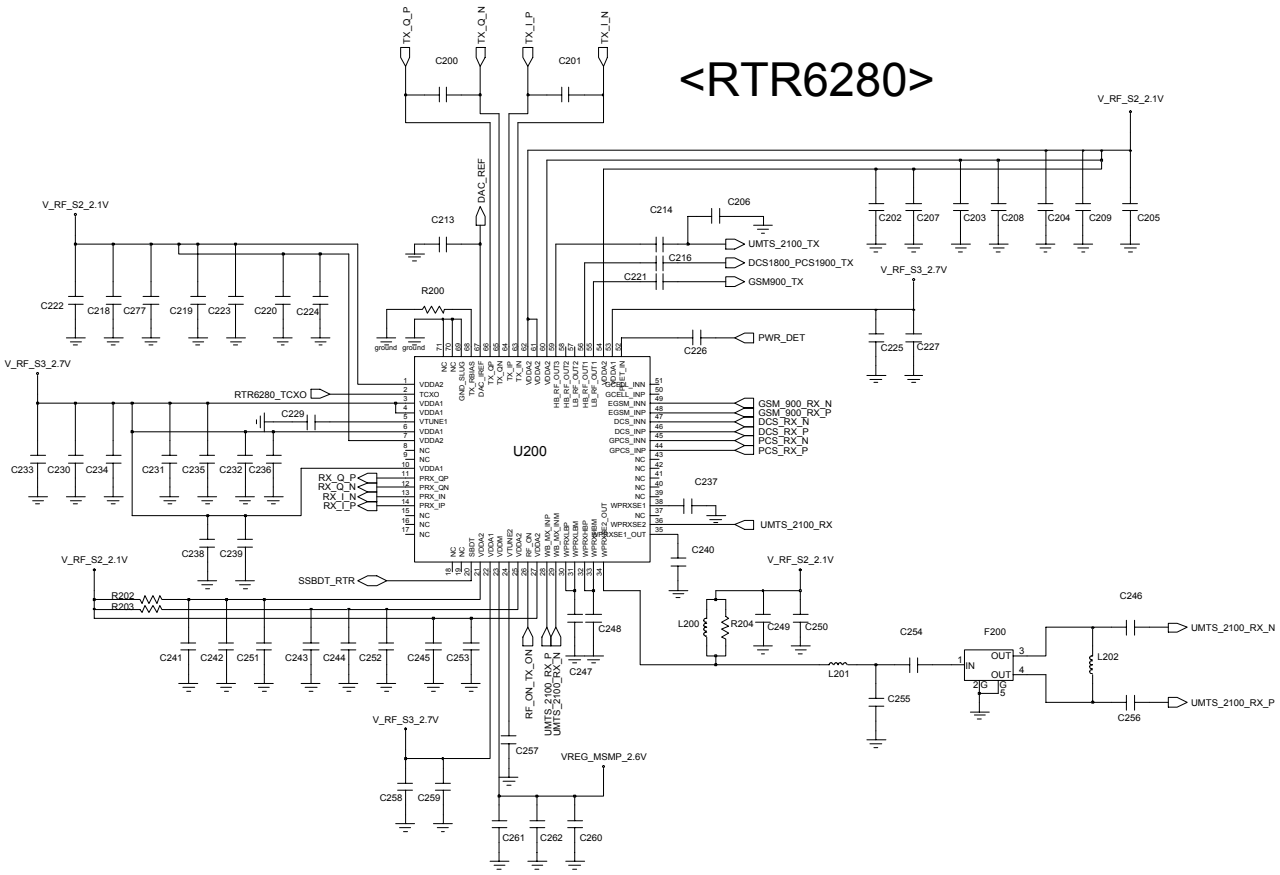

SAMSUNG Proprietary-Contents may change without notice
This Document can not be used without Samsung's authorization

10-2-5. EGSM900 TX

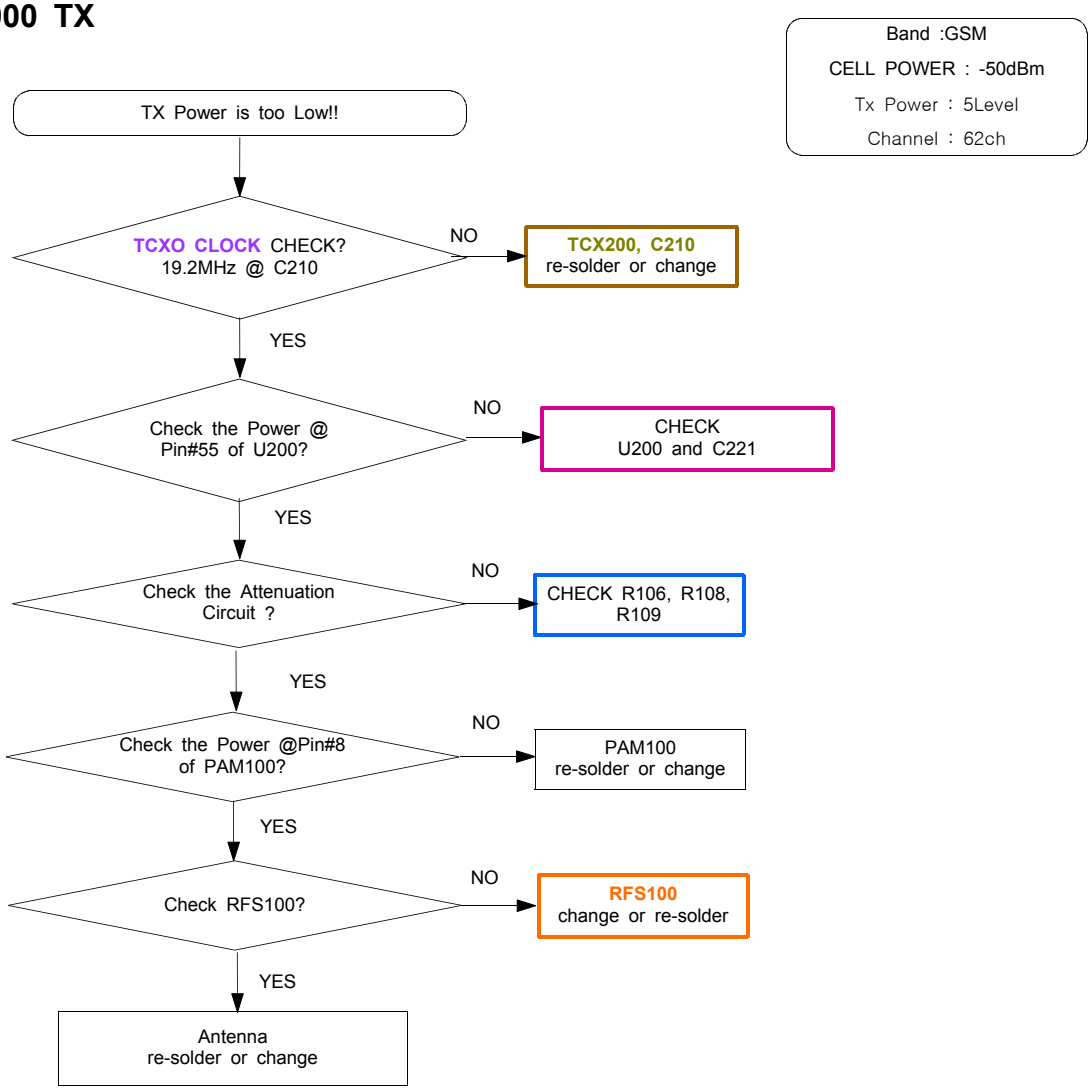

SAMSUNG Proprietary-Contents may change without notice
This Document can not be used without Samsung's authorization

10-2-6. DCS1800/PCS1900 TX

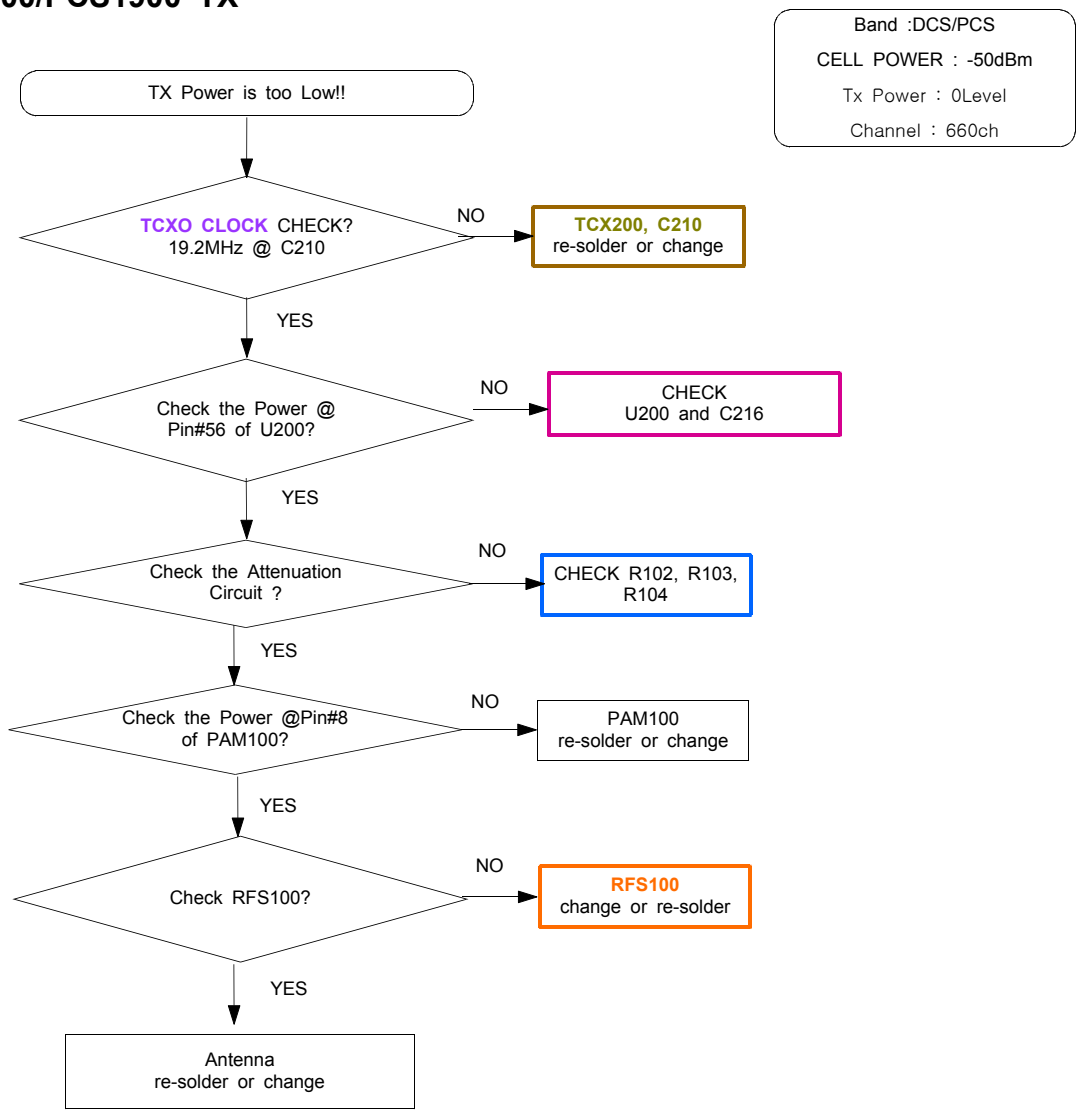

SAMSUNG Proprietary-Contents may change without notice
This Document can not be used without Samsung's authorization

10-2-7. WCDMA2100 TX

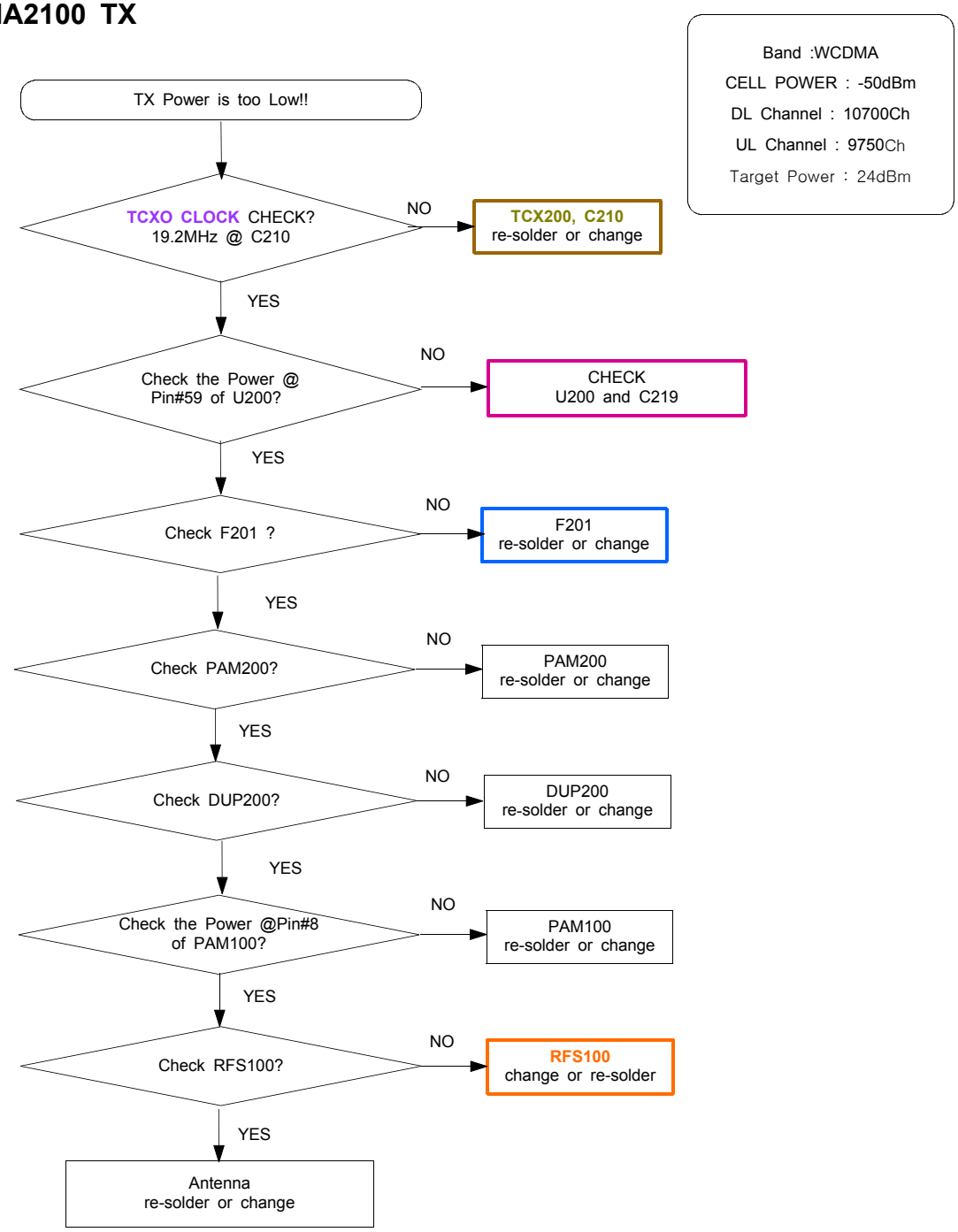

SAMSUNG Proprietary-Contents may change without notice
This Document can not be used without Samsung's authorization

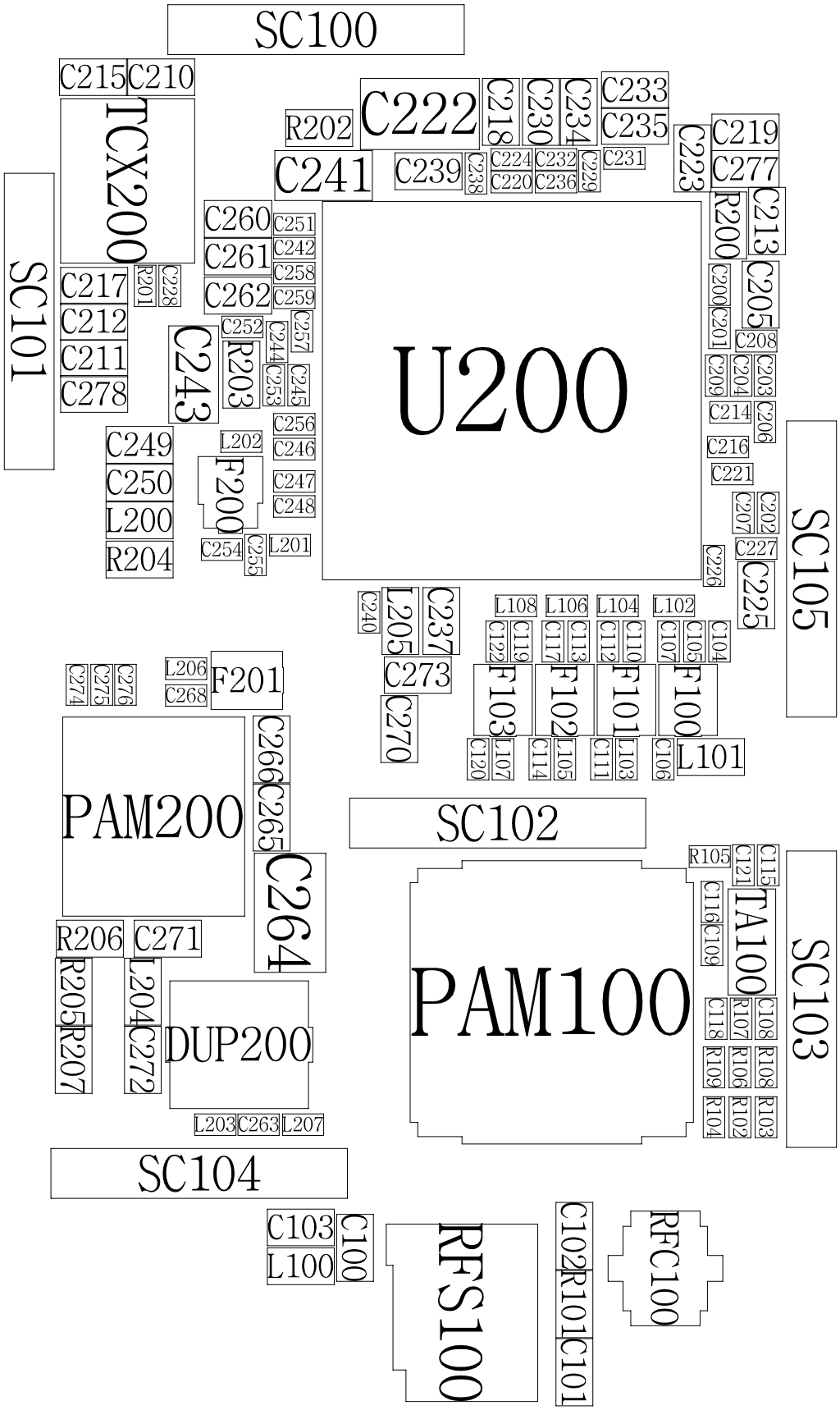

SAMSUNG Proprietary-Contents may change without notice
This Document can not be used without Samsung's authorization

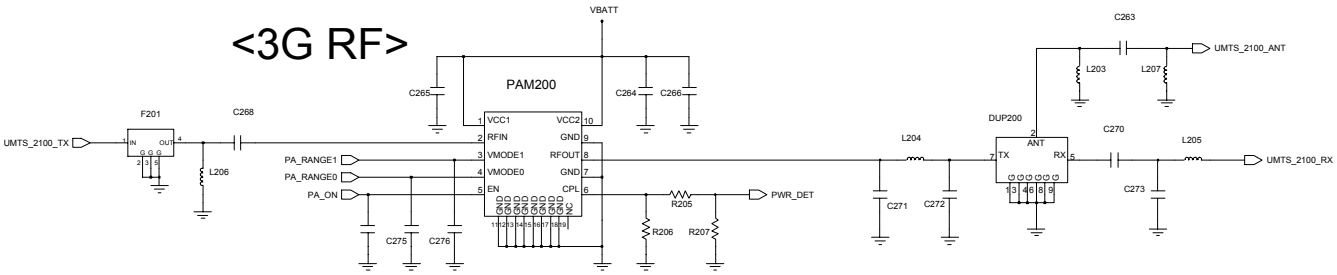

SAMSUNG Proprietary-Contents may change without notice
This Document can not be used without Samsung's authorization

10-2-8. Bluetooth Part

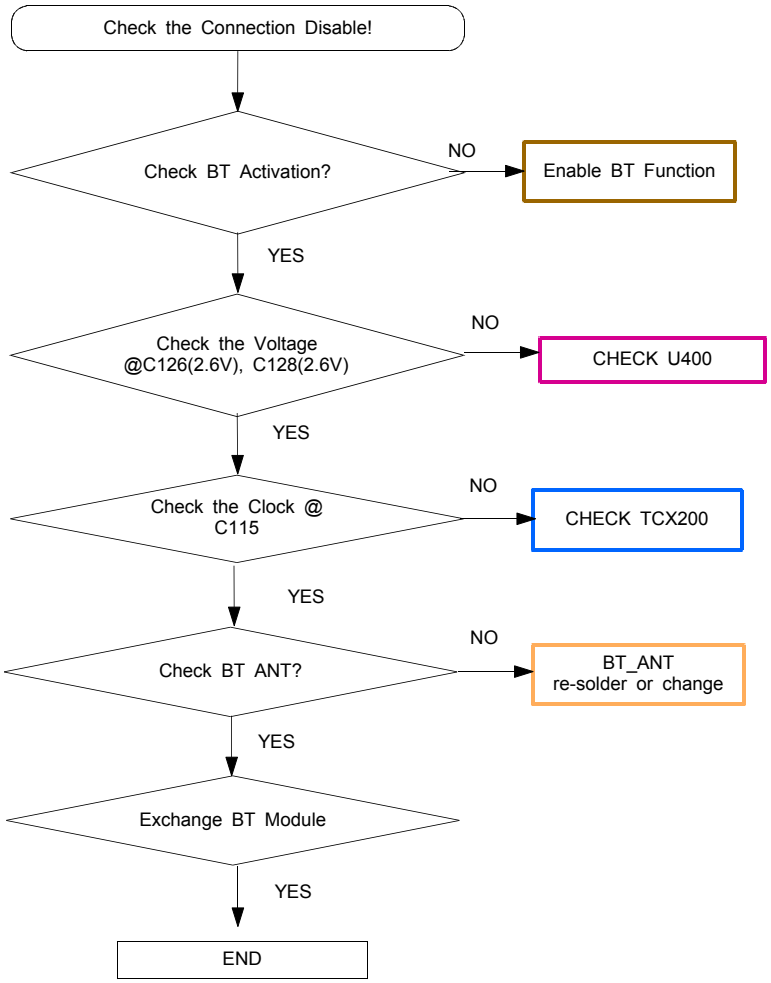

SAMSUNG Proprietary-Contents may change without notice
This Document can not be used without Samsung's authorization

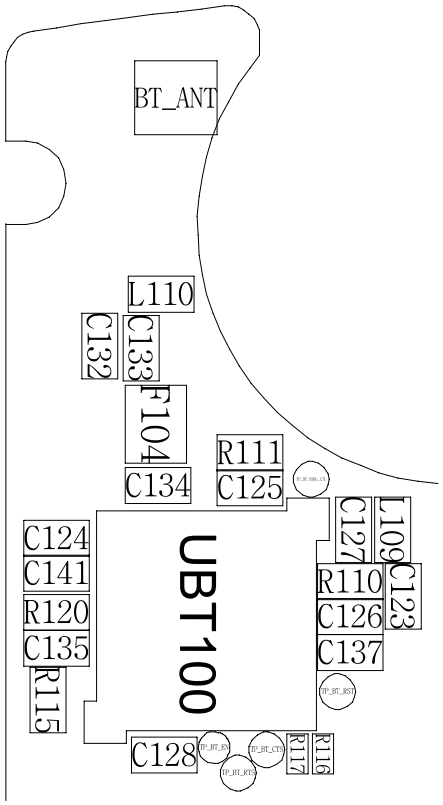

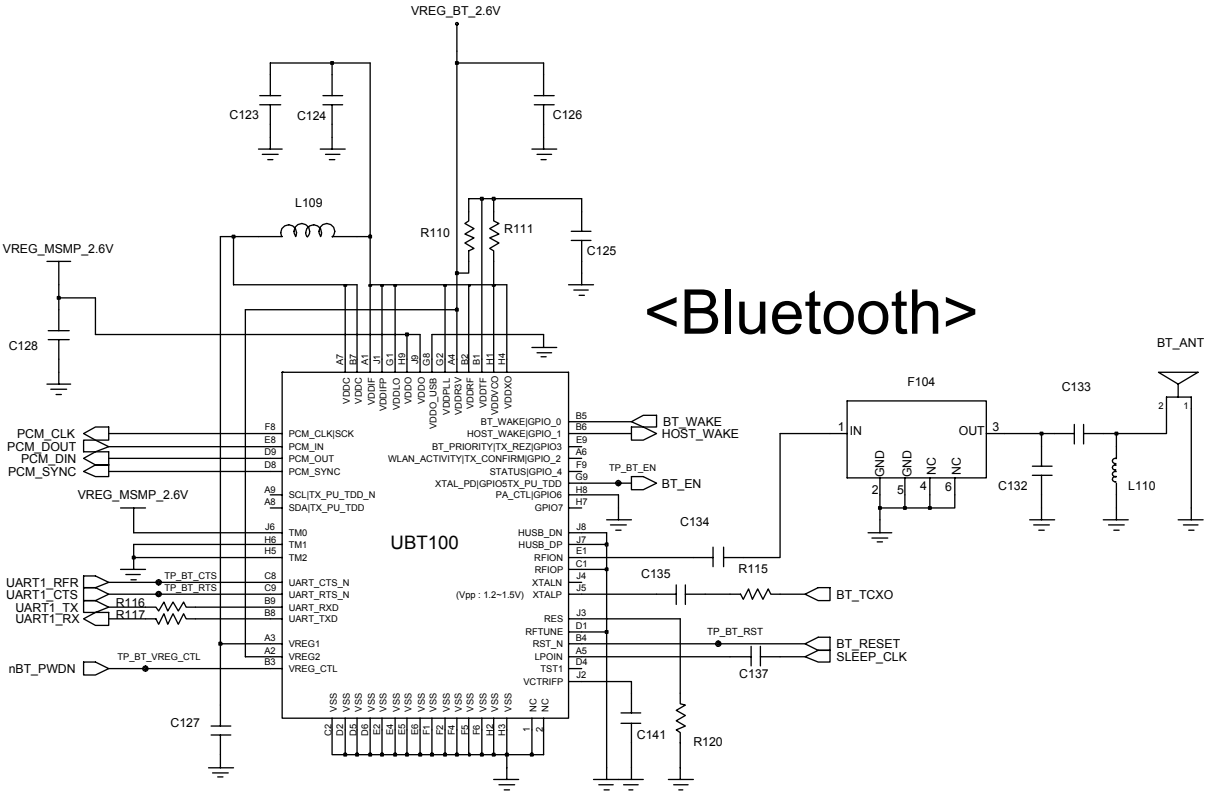

SAMSUNG Proprietary-Contents may change without notice
This Document can not be used without Samsung's authorization